Installation

Residential/Light Commercial Generator Set

Models:

48RCLC
60RCLB

Controller:

RDC2

KOHLER®

TP-7203 6/24e

⚠ WARNING: This product can expose you to chemicals, including carbon monoxide and benzene, which are known to the State of California to cause cancer and birth defects or other reproductive harm. For more information go to www.P65warnings.ca.gov

Kohler strongly recommends that only factory-authorized dealers install and service the generator.

Product Identification Information

Product identification numbers determine service parts. Record the product identification numbers in the spaces below immediately after unpacking the products so that the numbers are readily available for future reference. Record field-installed kit numbers after installing the kits.

Generator Set Identification Numbers

Record the product identification numbers from the generator set nameplate(s).

Model Designation _____

Specification Number _____

Serial Number: _____

Controller Identification

Record the controller description from the generator set operation manual, spec sheet, or sales invoice.

Controller Description_____

Engine Identification

Record the product identification information from the engine nameplate.

Manufacturer_____

Model Designation_____

Serial Number_____

Accessory Number	Accessory Description

Accessory Number	Accessory Description

Table of Contents

Safety Precautions and Instructions **5**
Introduction **11**
Service Assistance **13**
Section 1. Lifting and Location **15**
1.1 Introduction 15
1.2 Lifting the Generator Set 17
1.3 Location and Mounting 19
1.3.1 Location Factors 19
1.3.2 Mounting Surface 20
1.3.3 Vibration Isolation 20
1.3.4 Prepare Site 20
1.3.5 Mount the Generator Set 20
Section 2. Electrical System **21**
2.1 Electrical Connections 22
2.2 Terminal Connector Torque 22
2.3 Ground and Neutral Connections 23
2.4 Battery Chargers 24
2.5 Power Supply 24
2.6 Connect AC and DC Wiring 25
2.7 Automatic Transfer Switch Connection 27
2.8 Communication Cable Specifications 30
2.9 Accessory Module RBUS Communication Connections 31
2.10 Other Accessories 33
2.11 Engine Starting Battery 34
Section 3. Fuel System **35**
3.1 Fuel Lines 35
3.2 Gas Regulators 36
3.3 Install and Connect Fuel Supply 37
3.4 Auto Dual Fuel Changeover Connections 38
3.5 Fuel Conversion Procedures 40
Section 4. Cooling System **43**
Section 5. Prestart Check and Test **45**
5.1 Prestart Installation Check 45
5.2 Set Exerciser 46
5.3 Operation Test 46
5.4 OnCue Plus Generator Management System 47
Section 6. Accessories **49**
6.1 Introduction 49
6.2 Battery Heaters 50
6.3 Block Heaters 50
6.4 Emergency Stop Kits 51
6.5 Load Management 51
6.5.1 Power Relay Module 52
6.6 OnCue Plus Wireless Kit 53
6.7 Programmable Interface Module (PIM) 53
6.7.1 PIM to Generator Set Connections 53
6.7.2 PIM Inputs and Outputs 54

Section 7. Generator Reconnection 55
7.1 Voltage Reconnection 55
7.2 Four-Lead (Singal-Phase) Generator Sets 56
7.3 12-Lead (Three-Phase) Generator Sets 57
7.4 Changing System Settings 59
7.5 Voltage Calibration 61
7.5.1 Calibration using the RDC2 Controller Keypad and Menus 62
7.5.2 Calibration Using SiteTech 64
Section 8. Diagrams and Drawings 67
Appendix A. Abbreviations 79

IMPORTANT SAFETY INSTRUCTIONS. Electromechanical equipment, including generator sets, transfer switches, switchgear, and accessories, can cause bodily harm and pose life-threatening danger when improperly installed, operated, or maintained. To prevent accidents be aware of potential dangers and act safely. Read and follow all safety precautions and instructions. SAVE THESE INSTRUCTIONS.

This manual has several types of safety precautions and instructions: Danger, Warning, Caution, and Notice.

DANGER

DANGER indicates a hazardous situation which, if not avoided, will result in death or serious injury.

WARNING

WARNING indicates a hazardous situation which, if not avoided, could result in death or serious injury.

CAUTION

CAUTION indicates a hazardous situation which, if not avoided, could result in minor or moderate injury.

NOTICE

NOTICE is used to address practices not related to physical injury.

Safety decals affixed to the equipment in prominent places alert the operator or service technician to potential hazards and explain how to act safely. The decals are shown throughout this publication to improve operator recognition. Replace missing or damaged decals.

Accidental Starting

WARNING	
	Accidental starting. **Can cause severe injury or death.** Disconnect the battery cables before working on the generator set. Remove the negative (–) lead first when disconnecting the battery. Reconnect the negative (–) lead last when reconnecting the battery.

Disabling the generator set. Accidental starting can cause severe injury or death. Before working on the generator set or equipment connected to the set, disable the generator set as follows: (1) Press the generator set off/reset button to shut down the generator set. (2) Disconnect the power to the battery charger, if equipped. (3) Remove the battery cables, negative (–) lead first. Reconnect the negative (–) lead last when reconnecting the battery. Follow these precautions to prevent the starting of the generator set by the remote start/stop switch.

Battery

WARNING	
	Sulfuric acid in batteries. **Can cause severe injury or death.** Wear protective goggles and clothing. Battery acid may cause blindness and burn skin.

WARNING	
	Explosion. **Can cause severe injury or death.** **Relays in the battery charger cause arcs or sparks.** Locate the battery in a well-ventilated area. Isolate the battery charger from explosive fumes.

Battery gases. Explosion can cause severe injury or death. Battery gases can cause an explosion. Do not smoke or permit flames or sparks to occur near a battery at any time, particularly when it is charging. Do not dispose of a battery in a fire. To prevent burns and sparks that could cause an explosion, avoid touching the battery terminals with tools or other metal objects. Remove all jewelry before servicing the equipment. Discharge static electricity from your body before touching batteries by first touching a grounded metal surface away from the battery. To avoid sparks, do not disturb the battery charger connections while the battery is charging. Always turn the battery charger off before disconnecting the battery connections. Ventilate the compartments containing batteries to prevent accumulation of explosive gases.

Battery electrolyte is a diluted sulfuric acid. Battery acid can cause severe injury or death. Battery acid can cause blindness and burn skin. Always wear splashproof safety goggles, rubber gloves, and boots when servicing the battery. Do not open a sealed battery or mutilate the battery case. If battery acid splashes in the eyes or on the skin, immediately flush the affected area for 15 minutes with large quantities of clean water. Seek immediate medical aid in the case of eye contact. Never add acid to a battery after placing the battery in service, as this may result in hazardous spattering of battery acid.

Battery short circuits. Explosion can cause severe injury or death. Short circuits can cause bodily injury and/or equipment damage. Disconnect the battery before generator set installation or maintenance. Remove all jewelry before servicing the equipment. Use tools with insulated handles. Remove the negative (–) lead first when disconnecting the battery. Reconnect the negative (–) lead last when reconnecting the battery. Never connect the negative (–) battery cable to the positive (+) connection terminal of the starter solenoid. Do not test the battery condition by shorting the terminals together.

Battery acid cleanup. Battery acid can cause severe injury or death. Battery acid is electrically conductive and corrosive. Add 500 g (1 lb.) of bicarbonate of soda (baking soda) to a container with 4 L (1 gal.) of water and mix the neutralizing solution. Pour the neutralizing solution on the spilled battery acid and continue to add the neutralizing solution to the spilled battery acid until all evidence of a chemical reaction (foaming) has ceased. Flush the resulting liquid with water and dry the area.

Engine Backfire/Flash Fire

WARNING	
	Risk of fire. **Can cause severe injury or death.** Do not smoke or permit flames or sparks near fuels or the fuel system.

Servicing the fuel system. A flash fire can cause severe injury or death. Do not smoke or permit flames or sparks near the carburetor, fuel line, fuel filter, fuel pump, or other potential sources of spilled fuels or fuel vapors. Catch fuels in an approved container when removing the fuel line or carburetor.

Servicing the air cleaner. A sudden backfire can cause severe injury or death. Do not operate the generator set with the air cleaner removed.

Combustible materials. A fire can cause severe injury or death. Generator set engine fuels and fuel vapors are flammable and explosive. Handle these materials carefully to minimize the risk of fire or explosion. Equip the compartment or nearby area with a fully charged fire extinguisher. Select a fire extinguisher rated ABC or BC for electrical fires or as recommended by the local fire code or an authorized agency. Train all personnel on fire extinguisher operation and fire prevention procedures.

Exhaust System

WARNING	
	Carbon monoxide. **Can cause severe nausea, fainting, or death.** The exhaust system must be leakproof and routinely inspected.

Generator set operation. Carbon monoxide can cause severe nausea, fainting, or death. Carbon monoxide is an odorless, colorless, tasteless, nonirritating gas that can cause death if inhaled for even a short time. Avoid breathing exhaust fumes when working on or near the generator set. Never operate the generator set inside a building. Never operate the generator set where exhaust gas could seep inside or be drawn into a potentially occupied building through windows, air intake vents, or other openings.

Carbon monoxide detectors. Carbon monoxide can cause severe nausea, fainting, or death. Install carbon monoxide detectors on each level of any building adjacent to the generator set. Locate the detectors to adequately warn the building's occupants of the presence of carbon monoxide. Keep the detectors operational at all times. Periodically test and replace the carbon monoxide detectors according to the manufacturer's instructions.

Carbon monoxide symptoms. Carbon monoxide can cause severe nausea, fainting, or death. Carbon monoxide is a poisonous gas present in exhaust gases. Carbon monoxide is an odorless, colorless, tasteless, nonirritating gas that can cause death if inhaled for even a short time. Carbon monoxide poisoning symptoms include but are not limited to the following:

- Light-headedness, dizziness
- Physical fatigue, weakness in joints and muscles
- Sleepiness, mental fatigue, inability to concentrate or speak clearly, blurred vision
- Stomachache, vomiting, nausea

If experiencing any of these symptoms and carbon monoxide poisoning is possible, seek fresh air immediately and remain active. Do not sit, lie down, or fall asleep. Alert others to the possibility of carbon monoxide poisoning. Seek medical attention if the condition of affected persons does not improve within minutes of breathing fresh air.

Fuel System

WARNING	
	Explosive fuel vapors. **Can cause severe injury or death.** Use extreme care when handling, storing, and using fuels.

The fuel system. Explosive fuel vapors can cause severe injury or death. Vaporized fuels are highly explosive. Use extreme care when handling and storing fuels. Store fuels in a well-ventilated area away from spark-producing equipment and out of the reach of children. Never add fuel to the tank while the engine is running because spilled fuel may ignite on contact with hot parts or from sparks. Do not smoke or permit flames or sparks to occur near sources of spilled fuel or fuel vapors. Keep the fuel lines and connections tight and in good condition. Do not replace flexible fuel lines with rigid lines. Use flexible sections to avoid fuel line breakage caused by vibration. Do not operate the generator set in the presence of fuel leaks, fuel accumulation, or sparks. Repair fuel systems before resuming generator set operation.

Explosive fuel vapors can cause severe injury or death. Take additional precautions when using the following fuels:

Propane (LPG)—Adequate ventilation is mandatory. Because propane is heavier than air, install propane gas detectors low in a room. Inspect the detectors per the manufacturer's instructions.

Natural Gas—Adequate ventilation is mandatory. Because natural gas rises, install natural gas detectors high in a room. Inspect the detectors per the manufacturer's instructions.

Gas fuel leaks. Explosive fuel vapors can cause severe injury or death. Fuel leakage can cause an explosion. Check the LPG vapor or natural gas fuel system for leakage by using a soap and water solution with the fuel system test pressurized to 6–8 ounces per square inch (10–14 inches water column). Do not use a soap solution containing either ammonia or chlorine because both prevent bubble formation. A successful test depends on the ability of the solution to bubble.

Hazardous Noise

CAUTION	
	Hazardous noise. **Can cause hearing loss.** Never operate the generator set without a muffler or with a faulty exhaust system.

Engine noise. Hazardous noise can cause hearing loss. Generator sets not equipped with sound enclosures can produce noise levels greater than 105 dBA. Prolonged exposure to noise levels greater than 85 dBA can cause permanent hearing loss. Wear hearing protection when near an operating generator set.

Hazardous Voltage/Moving Parts

DANGER	
	Hazardous voltage. **Will cause severe injury or death.** Disconnect all power sources before opening the enclosure.

DANGER	
	Hazardous voltage. Moving parts. **Will cause severe injury or death.** Operate the generator set only when all guards and electrical enclosures are in place.

WARNING	
	Hazardous voltage. Backfeed to the utility system. **Can cause property damage, severe injury, or death.** If the generator set is used for standby power, install an automatic transfer switch to prevent inadvertent interconnection of standby and normal sources of supply.

CAUTION
Welding the generator set. **Can cause severe electrical equipment damage.** Welding on generator set will cause serious damage to engine electronic controls components. Disconnect all engine electronic control connections before welding.

Grounding electrical equipment. Hazardous voltage will cause severe injury or death. Electrocution is possible whenever electricity is present. Ensure you comply with all applicable codes and standards. Electrically ground the generator set, transfer switch, and related equipment and electrical circuits. Turn off the main circuit breakers of all power sources before servicing the equipment. Never contact electrical leads or appliances when standing in water or on wet ground because these conditions increase the risk of electrocution.

Disconnecting the electrical load. Hazardous voltage will cause severe injury or death. Disconnect the generator set from the load by turning off the line circuit breaker or by disconnecting the generator set output leads from the transfer switch and heavily taping the ends of the leads. High voltage transferred to the load during testing may cause personal injury and equipment damage. Do not use the safeguard circuit breaker in place of the line circuit breaker. The safeguard circuit breaker does not disconnect the generator set from the load.

Welding on the generator set. Can cause severe electrical equipment damage. Before welding on the generator set perform the following steps: (1) Remove the battery cables, negative (–) lead first. (2) Disconnect all engine electronic control module (ECM) connectors. (3) Disconnect all generator set controller and voltage regulator circuit board connectors. (4) Disconnect the engine battery-charging alternator connections. (5) Attach the weld ground connection close to the weld location.

Installing the battery charger. Hazardous voltage will cause severe injury or death. An ungrounded battery charger may cause electrical shock. Connect the battery charger enclosure to the ground of a permanent wiring system. As an alternative, install an equipment grounding conductor with circuit conductors and connect it to the equipment grounding terminal or the lead on the battery charger. Install the battery charger as prescribed in the equipment manual. Install the battery charger in compliance with local codes and ordinances.

Connecting the battery and the battery charger. Hazardous voltage will cause severe injury or death. Reconnect the battery correctly, positive to positive and negative to negative, to avoid electrical shock and damage to the battery charger and battery(ies). Have a qualified electrician install the battery(ies).

Short circuits. Hazardous voltage/current will cause severe injury or death. Short circuits can cause bodily injury and/or equipment damage. Do not contact electrical connections with tools or jewelry while making adjustments or repairs. Remove all jewelry before servicing the equipment.

Engine block heater. Hazardous voltage will cause severe injury or death. The engine block heater can cause electrical shock. Remove the engine block heater plug from the electrical outlet before working on the block heater electrical connections.

Electrical backfeed to the utility. Hazardous backfeed voltage can cause severe injury or death. Install a transfer switch in standby power installations to prevent the connection of standby and other sources of power. Electrical backfeed into a utility electrical system can cause severe injury or death to utility personnel working on power lines.

Heavy Equipment

WARNING	**Unbalanced weight.** **Improper lifting can cause severe injury or death and equipment damage.** Do not use lifting eyes. Lift the generator set using lifting bars inserted through the lifting holes on the skid.

Hot Parts

WARNING	**Hot coolant and steam.** **Can cause severe injury or death.** Before removing the pressure cap, stop the generator set and allow it to cool. Then loosen the pressure cap to relieve pressure. Fill system before starting unit.

WARNING	**Hot engine and exhaust system.** **Can cause severe injury or death.** Do not work on the generator set until it cools.

WARNING	**Hot engine oil.** **Can cause severe injury or death.** Avoid skin contact with hot oil. Do not start or operate the generator set with the engine oil filler cap removed, as hot oil can spray out. Ensure that the lubrication system is not under pressure when servicing. Do not work on the generator set until it cools.

Servicing the exhaust system. Hot parts can cause severe injury or death. Do not touch hot engine parts. The engine and exhaust system components become extremely hot during operation.

Notice

NOTICE

Canadian installations only. For standby service connect the output of the generator set to a suitably rated transfer switch in accordance with Canadian Electrical Code, Part 1.

Introduction

This manual provides installation instructions for Model 48RCLC and 60RCLB reduced-setback generator sets equipped with the Kohler 6.2L engine and the RDC2 controller. Operation manuals are available separately. See Figure 1 for an illustration of a typical Kohler generator set equipped with the Kohler 6.2L engine.

Kohler strongly recommends that only factory authorized dealers install and service the generator.

Information in this publication represents data available at the time of print. Kohler Co. reserves the right to change this publication and the products represented without notice and without any obligation or liability whatsoever. Only trained and qualified personnel should install or service the generator set.

Read this manual and carefully follow all procedures and safety precautions to ensure proper equipment operation and to avoid bodily injury. Read and follow the Safety Precautions and Instructions section at the beginning of this manual. Keep this manual with the equipment for future reference.

Figure 1 Kohler 6.2L Engine-powered Generator Set

Warranty Registration and Controller Unlock Code

The RDC2 controller requires an unlock code to operate in automatic (AUTO) mode. The unlock code needs to be entered only once, at or before the time of installation. See TP-7238 for instructions to register the generator set, obtain the unlock code, and enter it into the RDC2 controller, if necessary.

List of Related Materials

Figure 2 identifies related literature available for the generator sets covered in this manual. Only trained and qualified personnel should install or service the generator set.

Literature Type	Part Number
Specification Sheet, 48RCLC	G4-306
Specification Sheet, 60RCLB	G4-307
Operation Manual, Generator Set	TP-7102
Operation Manual, Engine	TP-7095
Service Manual, Generator Set	TP-7103
Service Manual, Kohler KG6208 Engine	TP-7096
Service Manual, Kohler KG6208 Fuel System & Diagnostic	TP-7097
Service Manual, Alternator	TP-6783
Parts Catalog, Engine	TP-6731
Parts Catalog, Generator Set	TP-6812
Accessory Literature	**Part Number**
Installation Instructions, Block Heaters	TT-1587
Installation Instructions, Load Shed Kit	TT-1609
Installation Instructions, Programmable Interface Module (PIM)	TT-1584
Installation Instructions, Power Relay Modules	TT-1646
User Guide, OnCuer Plus Program	TP-7006
Technical Manual, OnCuer Plus Program	TP-7007
Installation Instructions, OnCue Plus Wireless	TT-1790
Operation/Installation Manual, RXT ATS	TP-7193
Operation/Installation Manual, RDT ATS	TP-7192

Figure 2 Related Literature

Service Assistance

For professional advice and conscientious service, please contact your nearest Kohler dealer.

- Visit the Kohler Co. website at KOHLERPower.com.
- Look at the labels and decals on your Kohler product or review the appropriate literature or documents included with the product.
- Call toll free in the US and Canada 1-800-544-2444.

Notes

WARNING	
	Hazardous voltage. Backfeed to the utility system. **Can cause property damage, severe injury, or death.** If the generator set is used for standby power, install an automatic transfer switch to prevent inadvertent interconnection of standby and normal sources of supply.

Grounding electrical equipment. Hazardous voltage will cause severe injury or death. Electrocution is possible whenever electricity is present. Ensure you comply with all applicable codes and standards. Electrically ground the generator set, transfer switch, and related equipment and electrical circuits. Turn off the main circuit breakers of all power sources before servicing the equipment. Never contact electrical leads or appliances when standing in water or on wet ground because these conditions increase the risk of electrocution.

WARNING	
	Carbon monoxide. **Can cause severe nausea, fainting, or death.** The exhaust system must be leakproof and routinely inspected.

Generator set operation. Carbon monoxide can cause severe nausea, fainting, or death. Carbon monoxide is an odorless, colorless, tasteless, nonirritating gas that can cause death if inhaled for even a short time. Avoid breathing exhaust fumes when working on or near the generator set. Never operate the generator set inside a building. Never operate the generator set where exhaust gas could seep inside or be drawn into a potentially occupied building through windows, air intake vents, or other openings.

Carbon monoxide detectors. Carbon monoxide can cause severe nausea, fainting, or death. Install carbon monoxide detectors on each level of any building adjacent to the generator set. Locate the detectors to adequately warn the building's occupants of the presence of carbon monoxide. Keep the detectors operational at all times. Periodically test and replace the carbon monoxide detectors according to the manufacturer's instructions.

1.1 Introduction

Review this entire section and the Safety Precautions before starting the installation procedure. The generator set specification sheet also contains data that may be required during the installation process.

The generator set and accessories must be installed by an authorized Kohler dealer or authorized representative. The installation must comply with the National Electrical Code (NEC) and local codes. For Canadian installations, refer to the Canadian Electrical Code (CEC).

Note:
These instructions outline one procedure for installing the generator set. Local codes may require different procedures.

The generator set MUST be installed on a non-combustible surface. DO NOT install the generator set on a combustible surface.

The generator set must be installed outdoors. The exhaust systems on enclosed units are designed for outdoor installation only.

Note:
DO NOT install these generator sets inside a building.

Note:
Install carbon monoxide (CO) detector(s) on each level of any building adjacent to a generator set. Locate the detectors to adequately warn the building's occupants of the presence of carbon monoxide.

Read and follow the safety precautions in this manual and observe the decals on the equipment. Refer to the diagrams and drawings for dimensions and electrical connections during the installation procedure. Read the entire installation procedure and obtain the accessories and tools needed before beginning installation. Perform the steps in the order shown.

To install optional accessories, follow the instructions provided with each kit.

Tools Required:

- Multimeter (for measuring voltage and current)
- Frequency meter (may be part of multimeter)
- Manometer (for measuring fuel pressure)
- Torque wrench
- Wrenches
- Screwdrivers
- Socket wrenches or nut drivers
- Pliers
- Safety glasses or goggles
- Drill with bits and hole saw

Installer/Customer-Supplied Items:

- One BCI group 24 size 12-volt battery with a minimum rating of 630 cold cranking amps (CCA) at 0˚F
- Gravel or crushed stone
- Concrete mounting pad
- 120 VAC receptacle
- Cables and conduit
- Fuel supply line with shutoff valve and pipe sealant (provided by fuel supplier)
- Carbon monoxide (CO) detector(s)

Available Accessories:

- Battery
- Battery heater
- Block heater
- Flexible fuel lines
- Programmable Interface Module (PIM) See TT-1584 for installation instructions
- Load management system

1.2 Lifting the Generator Set

WARNING	
	Unbalanced weight. **Improper lifting can cause severe injury or death and equipment damage.** Do not use lifting eyes. Lift the generator set using lifting bars inserted through the lifting holes on the skid.

The approximate weight of the generator set with enclosure is shown in Figure 3. Use equipment that is rated for the generator set's weight to lift the unit into place. Lift the enclosure and generator set together as one unit.

Model	Weight, kg (lb.)
48RCLC	767 (1690)
60RCLB	859 (1894)

Figure 3 Approximate Weights

Insert lifting bars through the four holes in the mounting skid. The placement of the holes maintains balance during lifting.

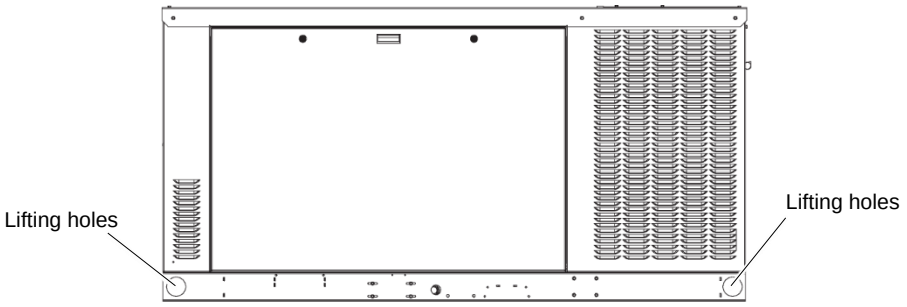

Figure 4 Typical Enclosure with Lifting Holes

Follow these general precautions when lifting all generator sets and related equipment.

- Install proper size rigging at the skid lifting eyes providing a direct pull on the skid lifting eye. Make sure the rigging does not work as a pry bar lever against the lifting eye.
- **DO NOT** lift the generator set using the lifting eyes attached to the engine and/or alternator as these lifting eyes cannot support the total weight of the generator set.
- **DO NOT** attach hoisting equipment to the enclosure. Insert lifting bars through the four holes in the mounting skid.
- Always protect cables, chains, and straps from sharp edges.
- Use a spreader bar to prevent lifting cables from contacting the enclosure.
- Lifting should only be conducted by those trained and experienced in lifting and rigging to achieve a safe and effective lift. Consideration needs to be given to, but not necessarily limited to the following items:
    - Weight and center of gravity of the equipment being lifted
    - Weight and center of gravity of the lifting device
    - Boom angles
    - Selection of rated rigging
    - Stability of lifting foundation
    - Wind and weather conditions
    - Local or regional codes that may require or restrict types of rigging.

The installer or lifting contractor should choose one of the following methods to lift the generator set depending upon the location circumstances and the generator set's weight and size.

Single and Double Spreader Bar and Skid Lifting Bar Method. See Figure 5.

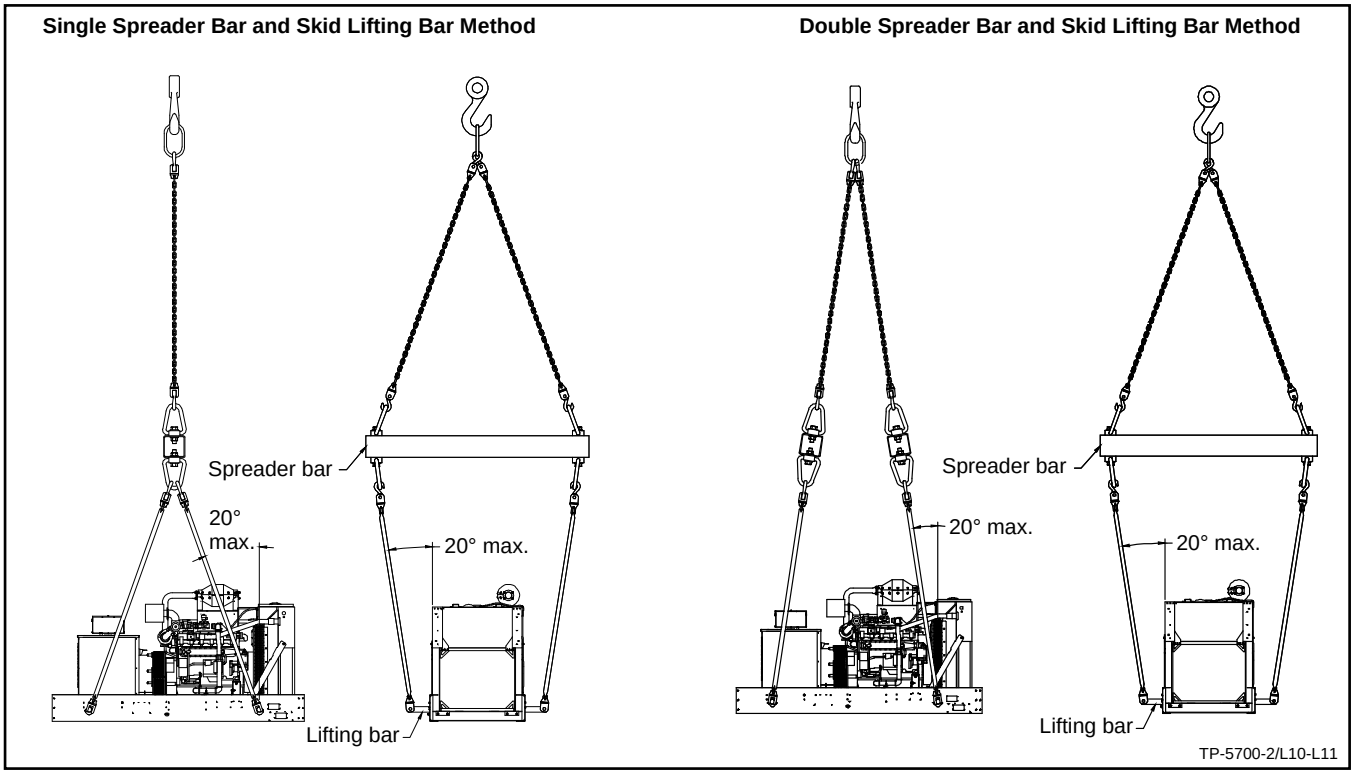

Figure 5 Single and Double Spreader Bar and Skid Lifting Bar Method

1.3 Location and Mounting

1.3.1 Location Factors

The generator set MUST be mounted on a non-combustible surface. The preferred method is to mount the generator set at ground level on a concrete pad. The concrete pad or other non-combustible mounting surface must cover the entire bottom of the generator base/skid to ensure proper air flow through the enclosure.

For above-ground installations or installations suspended above ground level, including roof installations, weight considerations are especially important. The building engineer must determine whether the structure can support the weight of the generator set.

The location of the generator set must:

- Support the weight of the generator set and related equipment such as batteries, radiators, and mounting pad(s). Keep in mind that the mounting pad weight may exceed the weight of the generator set.
- Meet applicable fire rating and other national, state, and local codes and standards.
- Minimize the risk that people will come into contact with hot generator set surfaces.
- Position the generator set over a noncombustible surface. There must be no combustible material within six inches of the underside of the generator set. **DO NOT** allow accumulation of combustible materials under or around the generator set.
- Allow the use of flexible sections of fuel pipe and conduit to isolate generator set vibration, preventing breakage and reducing noise.
- Not be subject to flooding.
- Allow safe direction of engine exhaust as noted on the generator set dimension drawing. Do not locate the generator set near patios, decks, play areas, or animal shelters.
- Provide clearance for cooling air flow and access for service. See Figure 6 and the dimension drawing for required minimum clearances from obstructions and combustible materials.
- Minimize the risk of public or unauthorized access.

Notice

DO NOT locate the generator set near patios, decks, play areas, or animal shelters. Keep items such as lawn furniture, toys, sports equipment, and all combustible materials away from the generator set exhaust outlet.

Remind family members, children, and visitors to use caution near the generator set. Generator sets connected to automatic transfer switches start automatically during exercise periods and power outages. Some generator set components become hot when the generator set is running and remain hot for a time after the generator set shuts down.

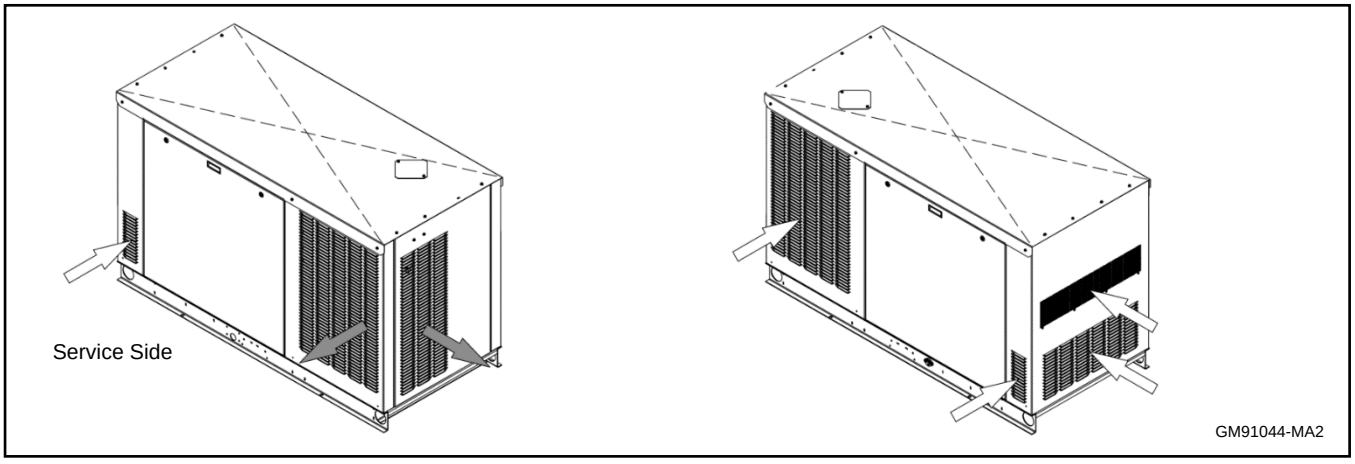

Figure 6 Air Intake and Exhaust

1.3.2 Mounting Surface

Install the generator set on a single, level concrete mounting pad. This method provides maximum stability and ensures correct cooling air flow through the generator set. There must be no combustible material within six inches of the underside of the generator set. The recommended mounting pad dimensions and stub-up locations are shown on the dimension drawing.

Refer to the generator set dimension drawing for conduit and fuel-line placement. The drawings give dimensions for electrical and fuel connection rough-ins and stub-ups.

1.3.3 Vibration Isolation

The generator set is equipped with neoprene vibration isolators. Connections between the generator set or its mounting base and any conduits or fuel lines must include flexible sections to prevent breakage and to isolate vibration.

1.3.4 Prepare Site

Install the generator set outdoors near the incoming gas service. The generator set location must allow easy access for maintenance and service. The required distance from a structure is dependent on state and local codes. See the dimension drawings for specific requirements for clearance on all sides of the generator set.

Plan the installation so that the exhaust outlets of the generator set are not directed toward the building or any openings where exhaust gas could be drawn into the building.

Install carbon monoxide detectors on each level of any building adjacent to the generator set. Locate the detectors to adequately warn the building's occupants of the presence of carbon monoxide.

1. Obtain a building permit and contact your local utility companies to mark the locations of underground pipes and cables.
2. Prepare an area for mounting the generator set.
   a. Clear all combustible materials, including plants and shrubs, building materials, and lawn furniture, from the area around the generator set and beyond the exhaust outlets of the generator set. See the dimension drawing for clearance requirements.
   b. Spread a 76 mm (3 in.) thick layer of gravel to support the concrete mounting pad. For the mounting pad dimensions, see the generator set dimension drawing.
   c. Lay a 100 mm (4 in.) thick concrete pad on the gravel layer. Include mounting bolts and stub-ups for the fuel supply and electrical conduit. See the dimension drawing for the mounting bolt and stub-up locations.

1.3.5 Mount the Generator Set

Note:
Read all safety precautions at the beginning of this publication before performing any work on the generator set.

1. Place the generator set on the concrete mounting pad. Secure the generator set with mounting bolts anchored in the concrete pad.
2. Remove the shipping bracket, which is attached to the skid under the engine and labeled with a hang tag.
3. Remove the enclosure doors and alternator-end panel to gain access to the junction box and other generator set components during installation. Remove the covers to access the AC and DC connection terminal blocks.

DANGER	**Hazardous voltage.** **Will cause severe injury or death.** Disconnect all power sources before opening the enclosure.

DANGER	**Hazardous voltage. Moving parts.** **Will cause severe injury or death.** Operate the generator set only when all guards and electrical enclosures are in place.

WARNING	**Hazardous voltage. Backfeed to the utility system.** **Can cause property damage, severe injury, or death.** If the generator set is used for standby power, install an automatic transfer switch to prevent inadvertent interconnection of standby and normal sources of supply.

Grounding electrical equipment. Hazardous voltage will cause severe injury or death. Electrocution is possible whenever electricity is present. Ensure you comply with all applicable codes and standards. Electrically ground the generator set, transfer switch, and related equipment and electrical circuits. Turn off the main circuit breakers of all power sources before servicing the equipment. Never contact electrical leads or appliances when standing in water or on wet ground because these conditions increase the risk of electrocution.

Short circuits. Hazardous voltage/current will cause severe injury or death. Short circuits can cause bodily injury and/or equipment damage. Do not contact electrical connections with tools or jewelry while making adjustments or repairs. Remove all jewelry before servicing the equipment.

Before installing the generator set, provide for electrical connections through conduit to the transfer switch and other accessories for the generator set. Route DC leads in separate conduit from AC conductors. Carefully install the selected generator set accessories. Route wiring to the generator set through flexible connections. Comply with all applicable codes when installing a wiring system.

See the dimension drawings in the **Diagrams and Drawings** section for the recommended stub-up location.

AC circuit protection. All AC circuits must include circuit breaker or fuse protection. The circuit breaker must be rated for a maximum of 125% of the rated generator set output current. The circuit breaker must open all ungrounded connectors.

The generator set is equipped with a factory-installed circuit breaker.

2.1 Electrical Connections

Several electrical connections must be made between the generator set and other components of the system for proper operation. Most field-installed accessory kits include installation instructions. Comply with applicable national and local codes when installing a wiring system.

For Canadian installations, refer to the Canadian Electrical Code (CEC).

For customer-supplied wiring, select the wire temperature rating in Figure 7 based upon the following criteria:

- Select row 1, 2, 3, or 4 if the circuit rating is 110 amperes or less or requires #1 AWG (42.4 mm^2) or smaller conductors.
- Select row 3 or 4 if the circuit rating is greater than 110 amperes or requires #1 AWG (42.4 mm^2) or larger conductors.

Row	Temp. Rating	Copper (Cu) Only	Cu/Aluminum (Al) Combinations	Al Only
1	60˚C (140˚F) Or 75˚C (167˚F)	Use No. * AWG, 60˚C wire or use No. * AWG, 75˚C wire	Use 60˚C wire, either No. * AWG Cu, or No. * AWG Al or use 75˚C wire, either No. * AWG Cu or No. * AWG Al	Use 60˚C wire, No.* AWG or use 75˚C wire, No. * AWG
2	60˚C (140˚F)	Use No. * AWG, 60˚C wire	Use 60˚C wire, either No. * AWG Cu or No. * AWG Al	Use 60˚C wire, No.* AWG
3	75˚C (167˚F)	Use No. *† AWG, 75˚C wire	Use 75˚C wire, either No. *† AWG Cu or No. *† AWG Al	Use 75˚C wire, No.* † AWG
4	90˚C (194˚F)	Use No. *† AWG, 90˚C wire	Use 90˚C wire, either No. *† AWG Cu or No. *† AWG Al	Use 90˚C wire, No.* † AWG

* The wire size for 60˚C (140˚F) wire is not required to be included in the marking. If included, the wire size is based on ampacities for the wire given in Table 310-16 of the National Electrical Code®, in ANSI/NFPA 70, and on 115% of the maximum current that the circuit carries under rated conditions. The National Electrical Code®, is a registered trademark of the National Fire Protection Association, Inc.
† Use the larger of the following conductors: the same size conductor as that used for the temperature test or one selected using the guidelines in the preceding footnote.

Figure 7 Terminal Markings for Various Temperature Ratings and Conductors

2.2 Terminal Connector Torque

Use the torque values shown in Figure 8 or Figure 9 for terminal connectors. Refer to UL-486A, UL-486B, and UL-486E for information on terminal connectors for aluminum and/or copper conductors. Comply with applicable national, state, and local codes when installing a wiring system.

Note:
If a connector has a clamp screw such as a slotted, hexagonal head screw with more than one means of tightening, test the connector using both applicable torque values provided in Figure 9.

Socket Size Across Flats, mm (in.)	Tightening Torque, Nm (in. lb.)
3.2 (1/8)	5.1 (45)
4.0 (5/32)	11.4 (100)
4.8 (3/16)	13.8 (120)
5.6 (7/32)	17.0 (150)
6.4 (1/4)	22.6 (200)
7.9 (5/16)	31.1 (275)
9.5 (3/8)	42.4 (375)
12.7 (1/2)	56.5 (500)
14.3 (9/16)	67.8 (600)

Note:
For values of slot width or length not corresponding to those specified, select the largest torque value associated with the conductor size. Slot width is the nominal design value. Slot length is to be measured at the bottom of the slot.

Figure 8 Tightening Torque for Pressure Wire Connectors with Internal-Drive Socket-Head Screws

Wire Size for Unit Connection	Tightening Torque, Nm (in. lb.)			
	Slot Head 4.7 mm (No. 10) or Larger*		Hexagonal Head—ExternalDrive Socket Wrench	
AWG, kcmil (mm^2)	Slot Width <1.2 mm (0.047 in.) Slot Length <6.4 mm (0.25 in.)	Slot Width >1.2 mm (0.047 in.) Slot Length >6.4 mm (0.25 in.)	Split-Bolt Connectors	Other Connections
18-10 (0.82-5.3)	2.3 (20)	4.0 (35)	9.0 (80)	8.5 (75)
8 (8.4)	2.8 (25)	4.5 (40)	9.0 (80)	8.5 (75)
6-4 (13.3-21.2)	4.0 (35)	5.1 (45)	18.6 (165)	12.4 (110)
3 (26.7)	4.0 (35)	5.6 (50)	31.1 (275)	16.9 (150)
2 (33.6)	4.5 (40)	5.6 (50)	31.1 (275)	16.9 (150)
1 (42.4)	—	5.6 (50)	31.1 (275)	16.9 (150)
1/0-2/0 (53.5-67.4)	—	5.6 (50)	43.5 (385)	20.3 (180)
3/0-4/0 (85.0-107.2)	—	5.6 (50)	56.5 (500)	28.2 (250)
250-350 (127-177)	—	5.6 (50)	73.4 (650)	36.7 (325)
400 (203)	—	5.6 (50)	93.2 (825)	36.7 (325)
500 (253)	—	5.6 (50)	93.2 (825)	42.4 (375)
600-750 (304-380)	—	5.6 (50)	113.0 (1000)	42.4 (375)
800-1000 (406-508)	—	5.6 (50)	124.3 (1100)	56.5 (500)
1250-2000 (635-1016)	—	—	124.3 (1100)	67.8 (600)

* For values of slot width or length not corresponding to those specified, select the largest torque value associated with the conductor size. Slot width is the nominal design value. Slot length is to be measured at the bottom of the slot.

Note:
If a connector has a clamp screw such as a slotted, hexagonal head screw with more than one means of tightening, test theconnector using both applicable torque values.

Figure 9 Tightening Torque for Screw-Type Pressure Wire Connectors

2.3 Ground and Neutral Connections

Ground the generator set. The grounding method must comply with NEC and local codes. Connect the ground to the generator set ground lug, terminal GRD inside the junction box (see Figure 10). Connect the grounds for utility and low voltage connections to the ground lugs provided in the customer connection box for those specific connections (see Figure 10).

Various regulations and site configurations including the National Electrical Code (NEC), local codes, and the type of transfer switch used in the application determine the grounding of the neutral at the alternator. NEC 2002 Section 250.20 is one example that has a very good explanation of the neutral grounding requirements for generator sets.

Generator sets are shipped with the generator set neutral attached to the alternator in the junction box. At installation, the neutral can be grounded at the generator set or lifted from the ground stud and isolated if the installation requires an ungrounded neutral connection at the alternator. The generator set will operate properly with the neutral either bonded to ground or isolated from ground at the alternator.

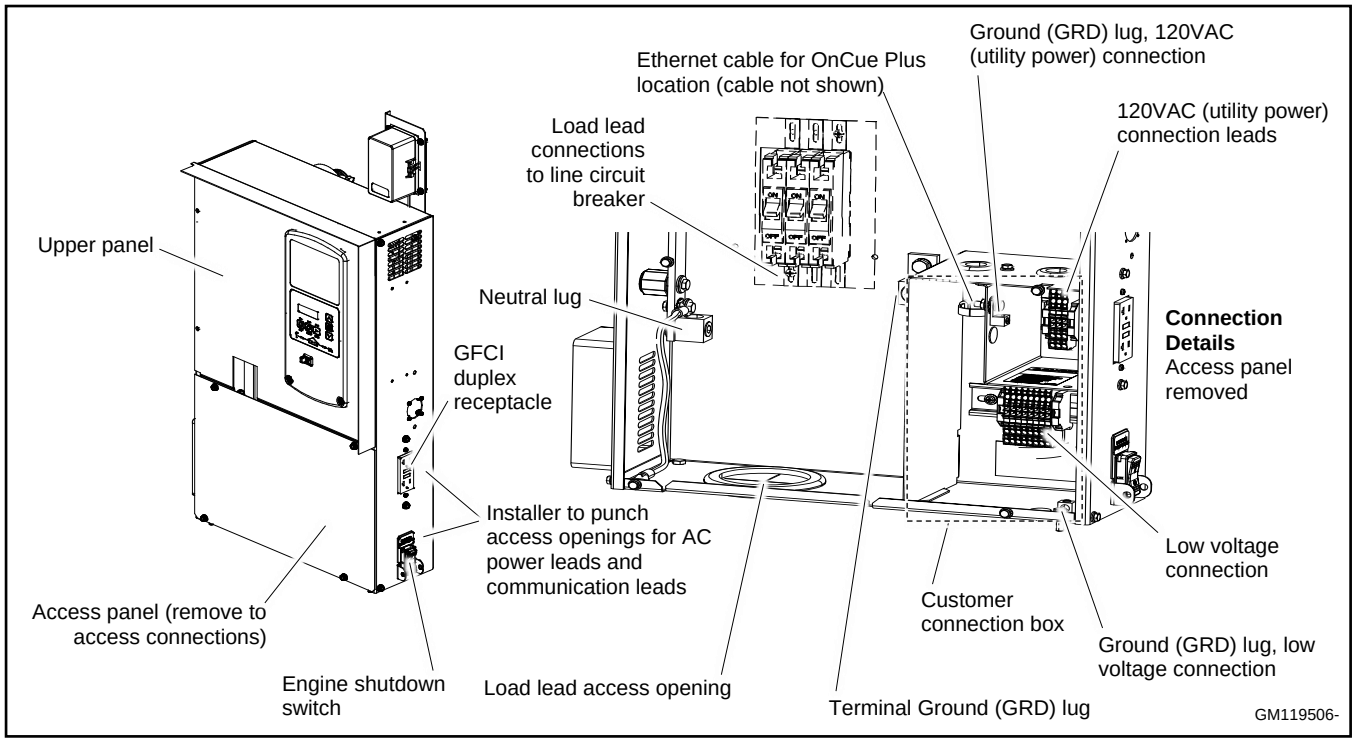

Figure 10 Generator Set Connection

2.4 Battery Chargers

An engine-driven, battery-charging alternator charges the battery whenever the generator set operates. Engine-driven systems can quickly restore the charge used in a normal cranking cycle.

When the engine is not operating, a very low charge rate from an AC-powered battery charger is usually sufficient to maintain a full charge on the batteries. The RDC2 controller contains a built-in battery charger to maintain the generator set's engine starting battery. Be sure to provide AC power for the integral battery charger as instructed in the **Power Supply** section.

2.5 Power Supply

Power must be supplied to the generator set location for the battery charger and optional accessories. The power source must comply with both state and local codes. The power to the accessories must be available at all times, i.e. the circuit must be powered by the utility source and backed up by the generator set.

Connect power to the leads in the utility power connection area as shown in the **Generator set Connections** figure. Connect the circuit to the load side of the transfer switch so that it is backed up by the generator. See the wiring diagrams in the **Diagrams and Drawings** section for connection details. See Figure 11 for the power requirements for the battery charger and accessories.

	Power Requirement		
Equipment	**Watts**	**Amps**	**Volts**
Battery charger (standard, integral to RDC2 controller)	50	0.42	120
Block heater (optional)	1500	12.5	120
		6.3	240
Battery heater (optional)	80	0.7	120

Figure 11 Power Requirements

2.6 Connect AC and DC Wiring

Note:
Have a licensed electrician make the following electrical connections. All connections must comply with state and local codes.

Size the wire according to the length of run and 115% of the circuit current (amperage) based on 75°C wire rating or less as directed by the National Electrical Code® (NEC) in ANSI/NFPA 70. See the **Electrical Connections** section for additional information about wire selection.

The generator set is equipped with a field-connection terminal block located in the access area below the junction box. Leads have been factory-installed from the junction box to the terminal block for easy field wiring.

Make all AC and DC customer connections inside the customer connection box. Do not remove the end panel or make connections inside the junction box. Refer to the wiring diagrams in the **Diagrams and Drawings** section.

Load Circuit Breaker Connections

See Figure 12 for load connection torque specifications.

Model	Frequency, Voltage	Breaker Description	Torque, Nm (in. lb.)
48RCLC	60Hz, 120/240V, 1Ph, 3W	200 Amp, 2-Pole	8.5 (75)
	60Hz, 120/208V, Wye, 3Ph, 4W	175 Amp, 3-Pole	9- 10.2 (80- 90)
	60Hz, 120/240V, Delta, 3Ph, 4W	150 Amp, 3-Pole	
	60Hz, 127/220V, Wye, 3Ph, 4W	200 Amp, 3-Pole	25- 26 (220 - 230)
	60Hz, 277/480V, Wye, 3Ph, 4W	80 Amp, 3-Pole	9-10.2 (80-90)
	50Hz, 230/400V, Wye, 3Ph, 4W	80 Amp, 3-Pole	
60RCLB	60Hz, 120/120V, 1Ph, 3W	250 Amp, 2-Pole	25- 26 (220 - 230)
	60Hz, 120/208V, Wye, 3Ph, 4W	225 Amp, 3-Pole	
	60Hz, 120/240V, Delta, 3Ph, 4W	200 Amp, 3-Pole	
	60Hz, 127/220V, Wye, 3Ph, 4W	225 Amp, 3-Pole	
	60Hz, 277/480V, Wye, 3Ph, 4W	100 Amp, 3-Pole	9-10.2 (80-90)
	50Hz, 230/400V, Wye, 3Ph, 4W	100 Amp, 3-Pole	

Figure 12 Load Circuit Breaker Hardware Torque Recommendations

Generator Set Connections

Note:
Read all safety precautions at the beginning of this publication before performing any work on the generator set.

Use separate conduit for the power cables and the low voltage communication or engine start leads. Local codes and the length of run as well as the transfer switch wire size requirements will determine the wire size needed for the AC leads.

Before applying utility power to the generator or connecting the battery, connect the RXT transfer switch and any RBUS accessories to the generator set terminal block (A, B, PWR, and COM).

Note:
Some codes require the use of a disconnect switch. Check the code requirements for your location and install a disconnect switch, if required.

1. Route the load leads into the junction box through the access opening in the bottom of the box. Connect the load leads from the line circuit breaker in the generator set junction box to the transfer switch emergency power connection points. See Figure 12. Refer to the transfer switch installation manual for ATS connection instructions.
2. Connect the neutral (L0) and ground (GRD) leads from the ATS and the main panel to the corresponding lugs in the connection box. See the **Ground and Neutral Connections** section for grounding information.
3. Cut or punch openings in the side of the connection box for the 120 VAC power supply leads and the low voltage connections. Use separate conduit for the power leads and the low voltage leads.
4. For transfer switch communication and/or engine start connection, see the **Automatic Transfer Switch Connection** section.

5. For connection of the optional programmable interface module (PIM), and/or a load shed kit, see the **Accessory Module RBUS Communication Connections** section.

6. Connect utility power for the controller's battery charger and GFCI outlet. Connect the circuit to the load side of the transfer switch so that it is backed up by the generator. See the **Power Supply** section for more information about the utility power requirement.

7. Install an AC receptacle for the optional AC accessories, if equipped. Power to this receptacle must be available when the generator set is not running.

   Note:
   The OnCue® Plus Generator Management System kit for remote generator monitoring and control is included with Model RCL generator sets. The OnCue Plus system requires installation of a network cable from the generator to the owner's computer router or the addition of the optional OnCue Plus Wireless kit.

8. To connect the OnCue® Plus Generator Management System to your generator, run network cable from the generator set to the customer's router or modem.

   Note:
   If the optional OnCue Plus Wireless kit is used, refer to the Installation Instructions provided with the kit.

   a. Route the network cable with other low- voltage signal wiring (for example, the RBUS communication leads or engine start leads to the transfer switch), in separate conduit from the AC load leads. If the network cable is longer than 100 meters (328 ft.), use a repeater or switch.

   b. Test the Internet connection for the generator by connecting a laptop to the network cable.

      1) Turn OFF any wireless connections to the laptop.

      2) Connect the network cable to the laptop. Connect the other end of the network cable to the customer's router or modem.

      3) Verify the Internet connection by opening your web browser and going to www.kohlerpower.com or any known website.

      4) Disconnect the network cable from the laptop.

   c. Use an RJ45 inline coupler to connect the Ethernet cable to the cable in the customer connection box. The inline coupler is included with the OnCue Plus kit.

2.7 Automatic Transfer Switch Connection

WARNING	
	Hazardous voltage. Backfeed to the utility system. **Can cause property damage, severe injury, or death.** If the generator set is used for standby power, install an automatic transfer switch to prevent inadvertent interconnection of standby and normal sources of supply.

A typical standby system has an automatic transfer switch connected to the generator set output to automatically transfer the electrical load to the generator set if the normal source fails. The normal power source is typically utility power. When normal power returns, the switch transfers the load back to the normal power source and then signals the generator set to stop.

Connect the ATS or remote start/stop switch. Connect the load leads from the generator set to the emergency source lugs on the ATS. Connect the RBUS or engine start connections as described below. Route low-voltage communication leads through separate conduit from the AC power and load leads. All connections must comply with applicable state and local codes.

Kohler Model RXT Automatic Transfer Switch

The RDC2 controller is designed to control the Kohler Model RXT transfer switch as well as the generator set.

Follow the installation instructions to connect the transfer switch interface board to the appropriate terminals on the generator set. The RDC2 controller uses a Kohler-proprietary communication protocol to communicate with the transfer switch.

When connected to a Kohler Model RXT transfer switch, the RDC2 controller provides the following features:

- Monitors and displays utility voltage and frequency.
- Schedule loaded exercises from the RDC2 generator set controller.
- Set the ATS system voltage and frequency.
- Allows calibration of the utility voltage and frequency at the generator set controller.
- Allows adjustment of transfer switch transfer time delays from the generator set controller.

RBUS communication connections for a Kohler® Model RXT transfer switch

One Model RXT transfer switch can be connected to the generator set. See Figure 13. Use shielded, twisted-pair cable to connect P10-1 through P10-4 on the transfer switch interface module to the generator set terminal block connections A, B, PWR, and COM. See **Communication Cable Specifications** Section for communication cable recommendations and maximum cable length.

The Model RXT transfer switch with the combined interface/load management board requires one set of RBUS connections to the generator set. However, the combined board acts as two RBUS modules: one RXT transfer switch and one load management device.

Note:
Connections 3 and 4 on the generator set are not used with the Model RXT transfer switch

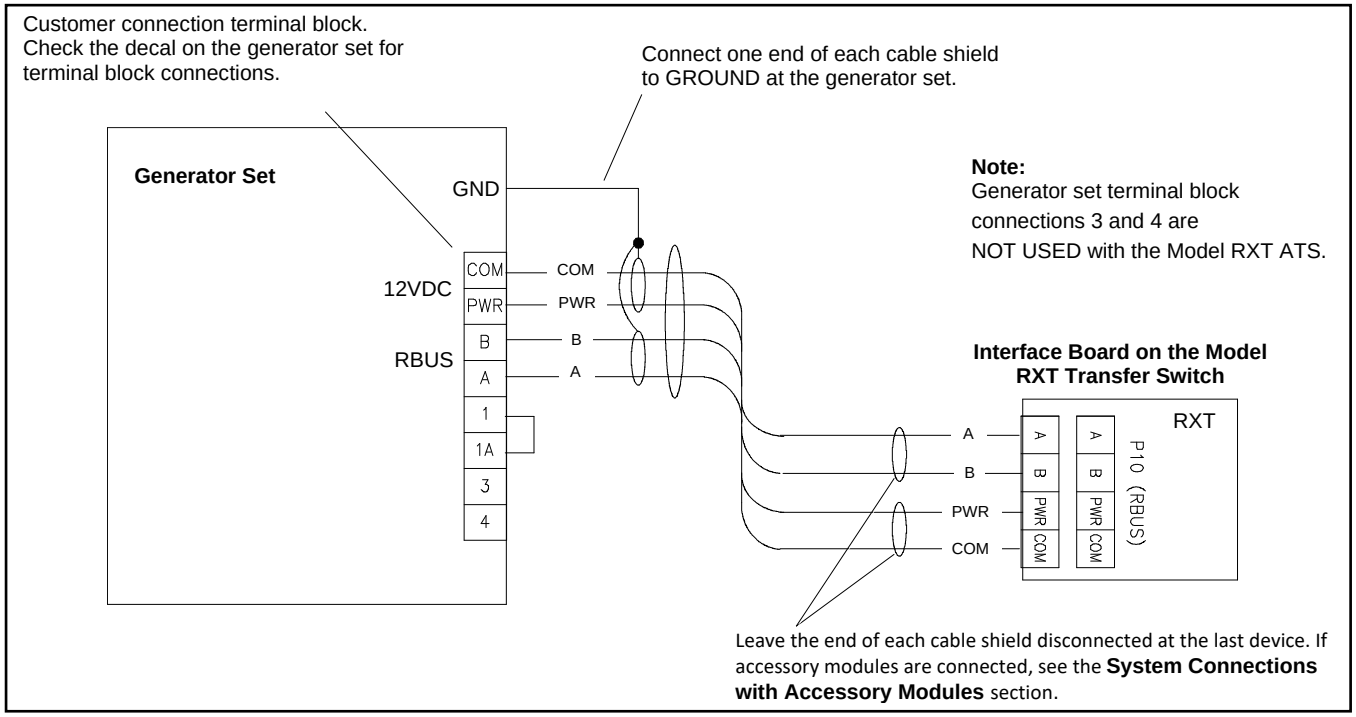

Figure 13 Model RXT Transfer Switch Communication Connection to Generator Set Terminal Block

Engine start connection for other transfer switches or a remote start/stop switch

Note:
Do not use the Kohler® Model RRT transfer switch with Model RCL generator sets.

Other Kohler transfer switches, including Model RDT or Model K (MPAC™) transfer switches can be used with the Kohler generator sets covered in this document. These transfer switches contain separate ATS controls that do not communicate with the RDC2 controller.

These transfer switches use a set of contacts to signal the engine/generator to start. When the normal source fails and the generator set is in AUTO mode, the transfer switch contacts close to signal the generator set to start and run. After the normal source returns, the contacts open to signal the generator set to stop.

The engine start terminals are usually located near the transfer switch contactor with an engine start decal identifying the terminals. Use the transfer switch wiring diagrams to identify the engine start terminals prior to making connections.

Connect the transfer switch engine-start contacts or a remote manual engine-start switch to the engine start terminals (3 and 4) on the generator set. Size the wire according to the transfer switch connection and the length of run. Use separate conduit for the DC engine-start leads and the AC generator set load cables and battery charger leads. See Figure 14.

Close the remote start contacts to start and run the generator set. Open the contacts to signal the generator set to stop. The generator set controller must be in AUTO mode for remote start/stop.

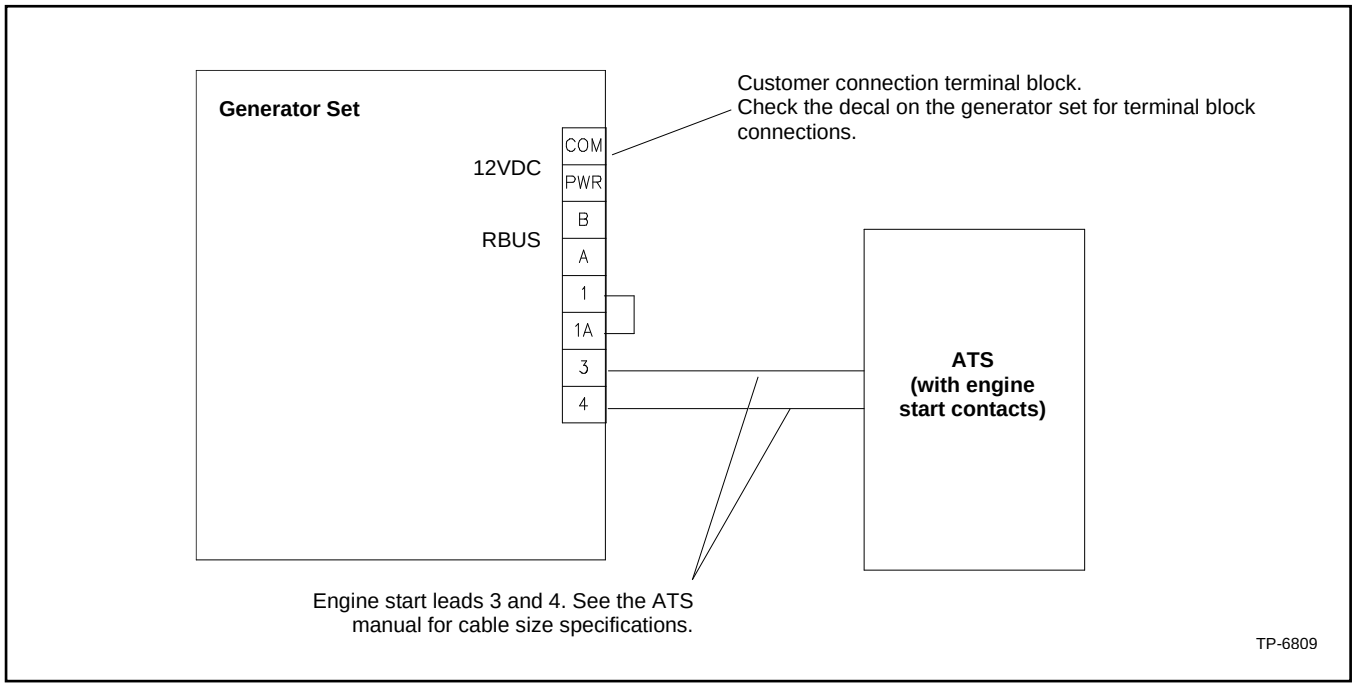

Figure 14 Engine Start Connections with Transfer Switch Models other than Model RXT

2.8 Communication Cable Specifications

The following sections cover communication connections from the generator set to automatic transfer switches and RBUS accessories, including the programmable interface module (PIM) and the load shed kit.

RBUS Connections A and B

For the RBUS communication connections A and B to the optional RBUS modules, use 20 AWG shielded, twisted-pair communication cable. Belden #9402 (two-pair) or Belden #8762 (single-pair) or equivalent cable is recommended. Optional RBUS modules can include the Model RXT transfer switch, RXT combined interface/load management board, automatic paralleling module (APM), programmable interface module (PIM), and/or the load shed kit for the RDT or RXT transfer switch.

For outdoor installations, including those with buried cables and or conduit, use outdoor- rated Belden #1075A or equivalent 20 AWG shielded, twisted-pair communication cable.

PWR and COM Connections

For the PWR and COM connections, the cable size and maximum cable length depends on the number of modules connected. See Figure 15. Note the shield connections shown in the **Accessory Module Communication Connection Details** figure.

- For short cable runs shown in the first two rows of Figure 15, use one pair in the two-pair communication cable for the A and B connections, and use the second pair for the PWR and COM connections.
- For the longer cable runs shown in the last two rows of Figure 15, use 12 or 14 AWG cable for PWR and COM, and use the 20 AWG communication cable specified above for the A and B connections only. In this case, single-pair communication cable such as Belden #8762 can be used for the A and B connections.

Note:
A model RXT transfer switch with combined interface/load management board acts as two RBUS modules: one RXT transfer switch and one load management device.

Note:
Power relay modules, if used, are not RBUS modules and do not have RBUS communication connections.

Cable (TB1 PWR and COM)	Maximum length per run, meters (ft.)			
	Number of Modules per Run (RXT, APM, PIM, and/or load management device)			
	1 Module	2 Modules	3 Modules	4 Modules
Belden #9402 or equivalent 20AWG for indoor installation	46 (150)	15 (50)	5 (17)	Do not use 20AWG for PWR and COM
Belden #1075A or equivalent 20AWG for outdoor installations or buried cables	46 (150)	15 (50)	5 (17)	Do not use 20AWG for PWR and COM
14 AWG *	137 (450)	137 (450)	137 (450)	107 (350)
12 AWG *	137 (450)	137 (450)	137 (450)	137 (450)
* Use 12 or 14 AWG cable for PWR and COM connections only. For RBUS connections A and B, use shielded, twisted pair communication cable specified above.				

Figure 15 Total Cable Lengths for PWR and COM Connections

2.9 Accessory Module RBUS Communication Connections

See Figure 16 through Figure 19 for RBUS communication connection options with up to three accessory modules. Accessory modules can include one Model RXT transfer switch, one programmable interface module (PIM), and/or one load shed kit.

See the **Communication Cable Specifications** section for cable size and length specifications.

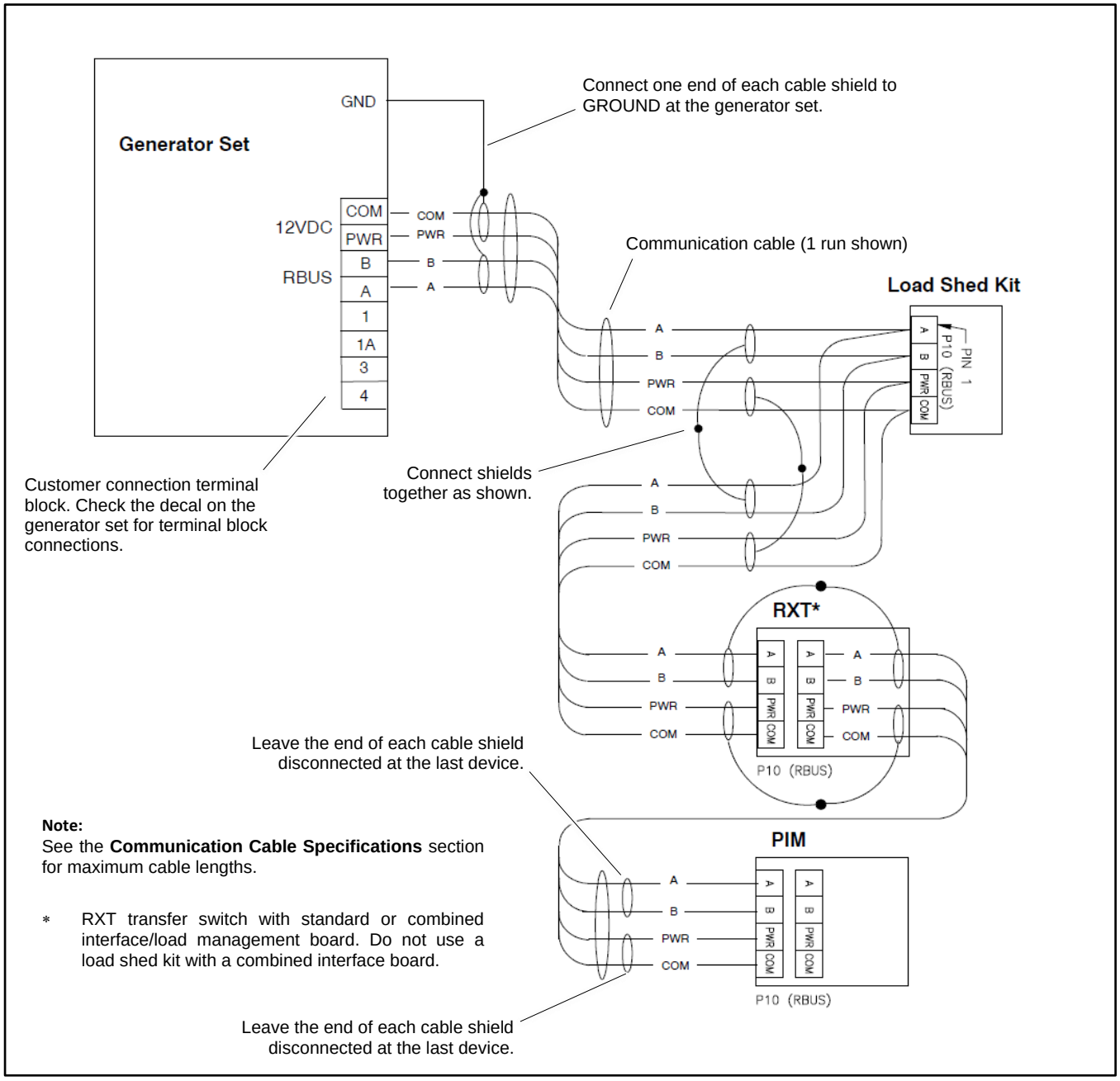

Figure 16 Accessory Module Communication Connection Details

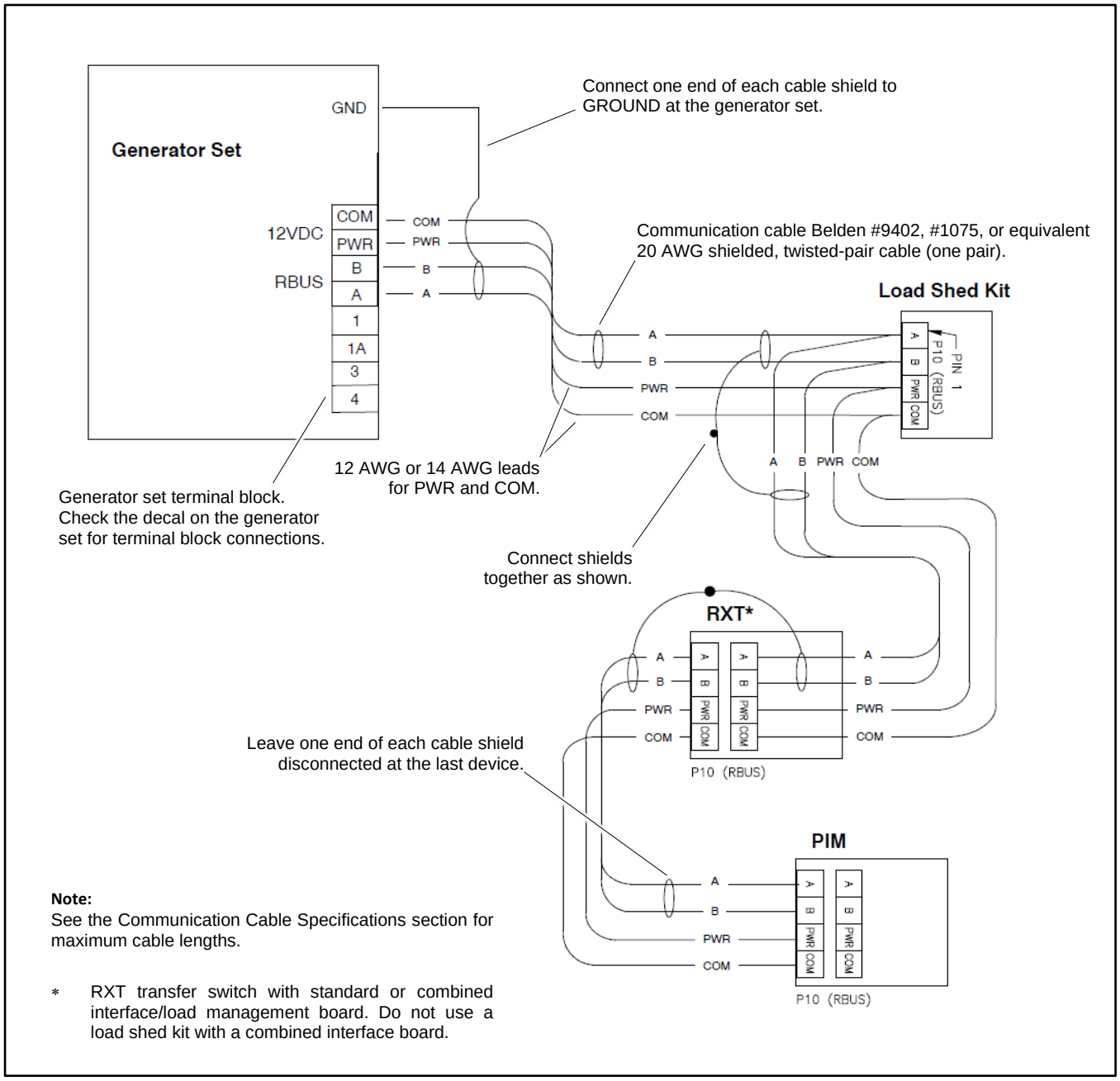

Figure 17 Accessory Module Connections with 12-14 AWG Power Leads (one cable run with three modules shown)

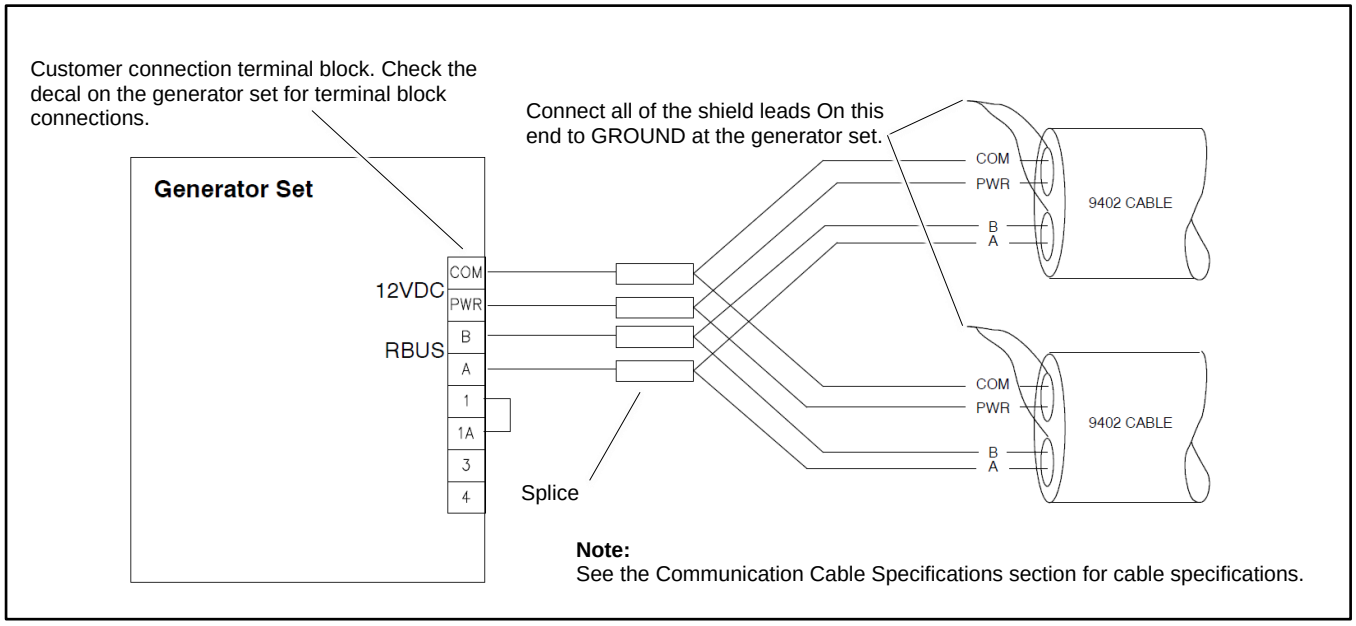

Figure 18 Multiple Connections to the Generator Set

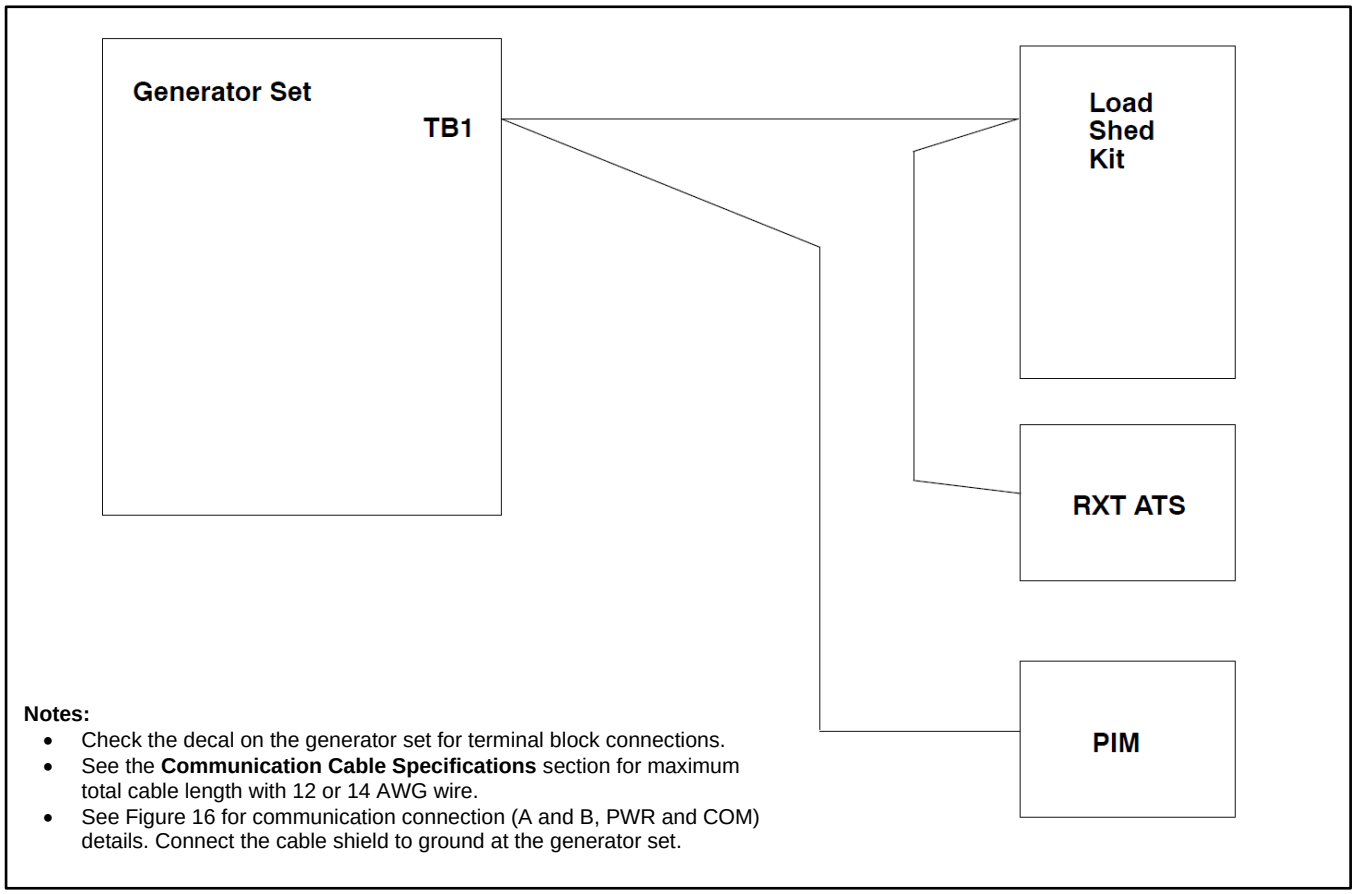

Figure 19 Accessory Module Connections (two cable runs with one and two modules shown)

2.10 Other Accessories

Install and connect optional accessories. Follow the installation instructions provided with the accessory kits. See Accessories section for more information.

2.11 Engine Starting Battery

WARNING	
	Explosion. **Can cause severe injury or death.** **Relays in the battery charger cause arcs or sparks.** Locate the battery in a well-ventilated area. Isolate the battery charger from explosive fumes.

Battery gases. Explosion can cause severe injury or death. Battery gases can cause an explosion. Do not smoke or permit flames or sparks to occur near a battery at any time, particularly when it is charging. Do not dispose of a battery in a fire. To prevent burns and sparks that could cause an explosion, avoid touching the battery terminals with tools or other metal objects. Remove all jewelry before servicing the equipment. Discharge static electricity from your body before touching batteries by first touching a grounded metal surface away from the battery. To avoid sparks, do not disturb the battery charger connections while the battery is charging. Always turn the battery charger off before disconnecting the battery connections. Ventilate the compartments containing batteries to prevent accumulation of explosive gases.

Battery short circuits. Explosion can cause severe injury or death. Short circuits can cause bodily injury and/or equipment damage. Disconnect the battery before generator set installation or maintenance. Remove all jewelry before servicing the equipment. Use tools with insulated handles. Remove the negative (–) lead first when disconnecting the battery. Reconnect the negative (–) lead last when reconnecting the battery. Never connect the negative (–) battery cable to the positive (+) connection terminal of the starter solenoid. Do not test the battery condition by shorting the terminals together.

WARNING	
	Sulfuric acid in batteries. **Can cause severe injury or death.** Wear protective goggles and clothing. Battery acid may cause blindness and burn skin.

Battery electrolyte is a diluted sulfuric acid. Battery acid can cause severe injury or death. Battery acid can cause blindness and burn skin. Always wear splashproof safety goggles, rubber gloves, and boots when servicing the battery. Do not open a sealed battery or mutilate the battery case. If battery acid splashes in the eyes or on the skin, immediately flush the affected area for 15 minutes with large quantities of clean water. Seek immediate medical aid in the case of eye contact. Never add acid to a battery after placing the battery in service, as this may result in hazardous spattering of battery acid.

Battery acid cleanup. Battery acid can cause severe injury or death. Battery acid is electrically conductive and corrosive. Add 500 g (1 lb.) of bicarbonate of soda (baking soda) to a container with 4 L (1 gal.) of water and mix the neutralizing solution. Pour the neutralizing solution on the spilled battery acid and continue to add the neutralizing solution to the spilled battery acid until all evidence of a chemical reaction (foaming) has ceased. Flush the resulting liquid with water and dry the area.

Use a BCI group 24 size 12-volt battery with a minimum rating of 630 cold cranking amps (CCA) at 0°F.

1. Ensure that the starting battery is fully charged before placing the battery in service.
2. Clean the battery posts and/or adapters if necessary.
3. Install battery post adapters, if needed.
4. See the dimension drawing for the battery rack location. Place the battery on the battery rack on the skid.
5. Connect the red battery cable to the positive (+) battery terminal.
6. Connect the black battery cable to the negative (-) battery terminal.
7. Place the boots over the battery terminals.

When power is applied to the RDC2 controller (that is, when the battery is connected), you will be prompted to set the date and time, and then to set the exerciser. See the **Set Exerciser** section and the generator set operation manual for instructions.

If the battery is disconnected for service or replacement, the exercise settings on the RDC2 controller are lost. Set the exerciser after installing and connecting the battery.

WARNING	
	Explosive fuel vapors. **Can cause severe injury or death.** Use extreme care when handling, storing, and using fuels.

The fuel system. Explosive fuel vapors can cause severe injury or death. Vaporized fuels are highly explosive. Use extreme care when handling and storing fuels. Store fuels in a well-ventilated area away from spark-producing equipment and out of the reach of children. Never add fuel to the tank while the engine is running because spilled fuel may ignite on contact with hot parts or from sparks. Do not smoke or permit flames or sparks to occur near sources of spilled fuel or fuel vapors. Keep the fuel lines and connections tight and in good condition. Do not replace flexible fuel lines with rigid lines. Use flexible sections to avoid fuel line breakage caused by vibration. Do not operate the generator set in the presence of fuel leaks, fuel accumulation, or sparks. Repair fuel systems before resuming generator set operation.

Gas fuel leaks. Explosive fuel vapors can cause severe injury or death. Fuel leakage can cause an explosion. Check the LPG vapor or natural gas fuel system for leakage by using a soap and water solution with the fuel system test pressurized to 6–8 ounces per square inch (10–14 inches water column). Do not use a soap solution containing either ammonia or chlorine because both prevent bubble formation. A successful test depends on the ability of the solution to bubble.

Explosive fuel vapors can cause severe injury or death. Take additional precautions when using the following fuels:

Propane (LPG)—Adequate ventilation is mandatory. Because propane is heavier than air, install propane gas detectors low in a room. Inspect the detectors per the manufacturer's instructions.

Natural Gas—Adequate ventilation is mandatory. Because natural gas rises, install natural gas detectors high in a room. Inspect the detectors per the manufacturer's instructions.

Gas fuel systems operate on either LP vapor or natural gas. Refer to the generator set specification sheet and the **Install and Connect Fuel Supply** section for more detailed information on fuel requirements.

Note:
The fuel system installation must comply with applicable national, state and local codes.

3.1 Fuel Lines

Gas lines. Never use fuel piping to ground electrical equipment. The gas supplier is responsible for installation, repair, and alteration to gas piping.

Use Schedule 40 black-iron pipe for gas piping. Copper tubing may be used if the fuel does not contain hydrogen sulfide or other ingredients that react chemically with copper.

Line size. Size piping according to the requirements of the equipment. The type of fuel, the distance it must travel from gas meter/tank to fuel shutoff solenoid, and the amount consumed by the engine must be considered when determining fuel line pipe size.

In addition to actual fuel consumption, consider the following pressure loss factors:

- Pipe length
- Other appliances on the same fuel supply
- Number of fittings

Measure the pipe length from the primary gas pressure regulator to the pipe connection on the generator set fuel inlet. Add 2.4 m (8 ft.) to the measured length for each 90 degree elbow. Use the pipe size indicated in Figure 20 for the total length of pipe.

Figure 20 is based on gas pressures of 3.4 kPa (0.5 psi, 13.8 in. water column) or less and a pressure drop of 0.12 kPa (0.018 psi, 0.5 in. water column) with a 0.60 specific gravity and with a normal amount of restriction from fittings. The fuel flow has been corrected for specific gravity to determine the pipe sizes shown in the table.

Flexible connections. Rigid mount the piping but protect it from vibration. Use flexible connections spanning a minimum of 152 mm (6 in.) between the stationary piping and the engine fuel inlet connection. **Do not bend the flexible fuel line** to make up for misalignment of the fuel supply line and the generator set fuel inlet. Sharp bends can restrict fuel flow and increase the possibility of flexible fuel line failure over time.

Model	Fuel	Corr. Factor	Maximum Fuel Flow Rate@ Full Load (corrected)		Nominal Iron Pipe Size, in.							
					Pipe Length, m (ft) *							
			M^3/hr	cfh	3.0 (10)	6.1 (20)	12.2 (40)	18.3 (60)	24.4 (80)	30.5 (100)	45.7 (150)	61.0 (200)
48RCLC	NG	0.962	24.8 (25.8)	875.3 (909.9)	1 1/4	1 1/4	1 1/2	2	2	2	2	2 1/2
	LPG	0.633	8.9 (14.1)	315.4 (498.2)	1	1 1/4	1 1/4	1 1/2	1 1/2	1 1/2	1 1/2	2
60RCLB	NG	0.962	28.7 (29.8)	1013 (1053)	1 1/4	1 1/2	2	2	2	2	2 1/2	2 1/2
	LPG	0.633	10.1 (16.0)	357.1 (564.1)	1	1 1/4	1 1/4	1 1/2	1 1/2	1 1/2	2	2

Figure 20 Fuel Pipe Sizes

3.2 Gas Regulators

Gas regulators reduce high incoming fuel pressures to lower levels acceptable for engines. See the generator set specification sheet for fuel supply pressure requirements.

Primary gas regulator. The primary regulator reduces the high pressure from a tank or transmission line to the lower pressure required by the secondary regulator on the engine. The fuel supplier provides the primary regulator. The fuel supplier is also responsible for providing sufficient gas pressure to operate the primary regulator.

Secondary gas regulator. The secondary regulator is factory-installed on the generator set engine and controls the inlet pressure to the engine. The models covered by this manual use an electronic pressure regulator.

Note:
The Direct acting Electronic Pressure Regulator (DEPR) and air/fuel mixer are specially calibrated emission-control devices. Do not adjust the DEPR or the air/fuel mixer.

3.3 Install and Connect Fuel Supply

Note:
Read all safety precautions at the beginning of this publication before performing any work on the generator set.

Note:
Have the fuel piping and primary regulator installed by the fuel supplier. The fuel supply installation must comply with NEC and local codes.

1. See the generator set spec sheet for the fuel supply requirements. Add up the fuel requirements for the generator set plus all other gas-fired equipment fueled by the same supply.
2. Check that the primary regulator and gas meter have sufficient capacity for the fuel requirements for the generator set plus all other gas-fired equipment. Have the fuel supplier install a larger gas meter, if necessary.
3. Determine the fuel pipe size as described in the previous section.
4. Have your fuel supplier install a manual fuel shutoff valve and rigid gas piping. Bring the pipe to within 254 mm (10 in.) of the generator set fuel inlet location.
5. Remove the enclosure door on the service side of the unit.
6. Connect the fuel supply:
   a. Apply pipe sealant that is approved for fuel connections to the threaded fuel connections.
   b. Use a section of flexible fuel line to connect the fuel supply to the 1 in. NPT fuel inlet connection on the generator set. See Figure 21 or the dimension drawing for the fuel inlet connection location. Do not bend the flexible fuel line to make up for misalignment of the fuel supply line and the generator set fuel inlet.
   c. Open the manual fuel valves and leak test all fuel connections using soapy water. If a leak is detected, close the fuel valves, disconnect the lines at the location of the leak, clean the fittings, and apply fresh pipe sealant. Reconnect the lines and recheck for leaks.
7. Verify that the fuel system is set up for the fuel being used (natural gas or LPG). See the **Fuel Conversion Procedures** section.
8. Connect a manometer to the fuel valve and verify sufficient fuel supply pressure with the engine running.

Note:
After the system installation is complete, check for fuel leaks with the generator set running.

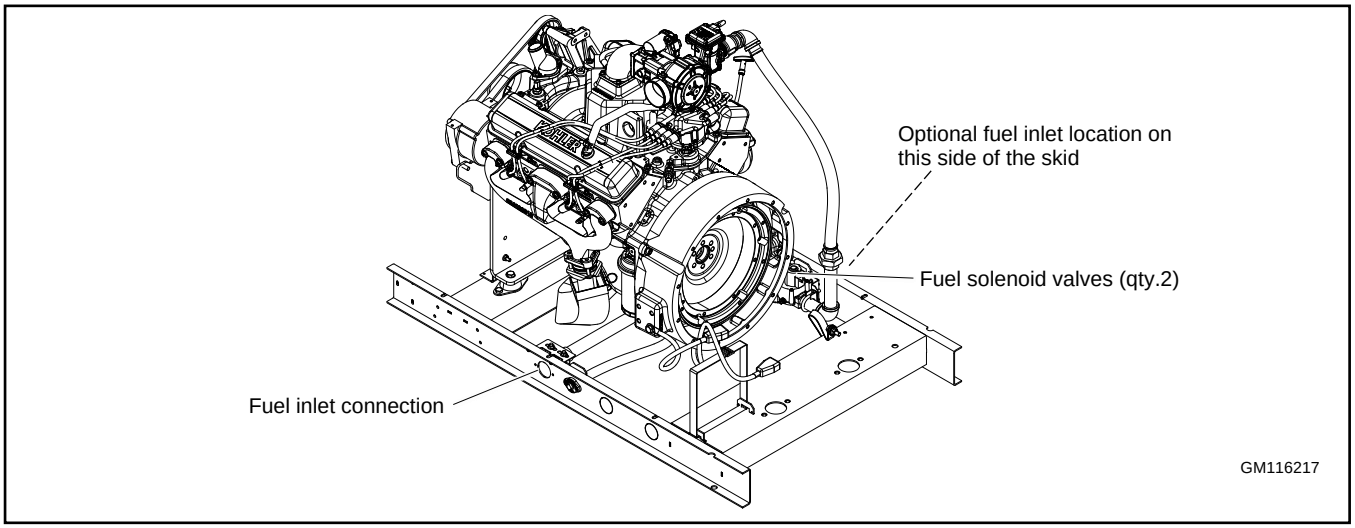

Figure 21 Fuel Supply Connection Location (generator set enclosure not shown)

3.4 Auto Dual Fuel Changeover Connections

Some applications use natural gas as the primary fuel and LP gas as the emergency fuel when natural gas is not available. The optional automatic changeover dual fuel system allows the system to switch to LP fuel automatically if the natural gas supply is not available.

The dual fuel natural gas and LP gas system contains a separate secondary gas regulator and dual solenoid valve for each fuel. A pressure switch on the primary fuel source closes when fuel pressure drops, which energizes a relay that closes the primary fuel solenoid and opens the secondary or emergency fuel solenoid.

The dual fuel reset box includes:

- An indicator light that turns on when the system is using LP fuel.
- A reset switch that allows manual return to natural gas, if available.

Once on LP, the fuel system will switch back to natural gas when:

- The LP fuel supply runs out; or
- The generator set stops and restarts; or
- The reset switch on the dual fuel box is used.

Procedure to Reset to Natural Gas

To reset the fuel to natural gas using the reset box, turn the reset switch clockwise and hold it briefly until the changeover occurs. The indicator light turns off when the system has changed back to natural gas.

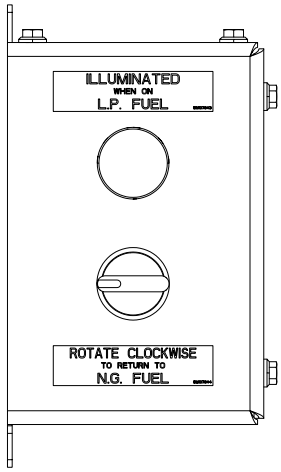

Figure 22 Dual Fuel Reset Box

Dual Fuel Automatic Changeover System

The optional dual fuel automatic changeover systems for RCL models are available as loose kits. Refer to the instruction sheet provided with the kit for installation instructions.

Fuel Connection

Check the decals near the fuel inlet connections on the generator set skid and be sure to connect the natural gas and LPG fuel supplies to the correct inlet pipes. See Figure 24.

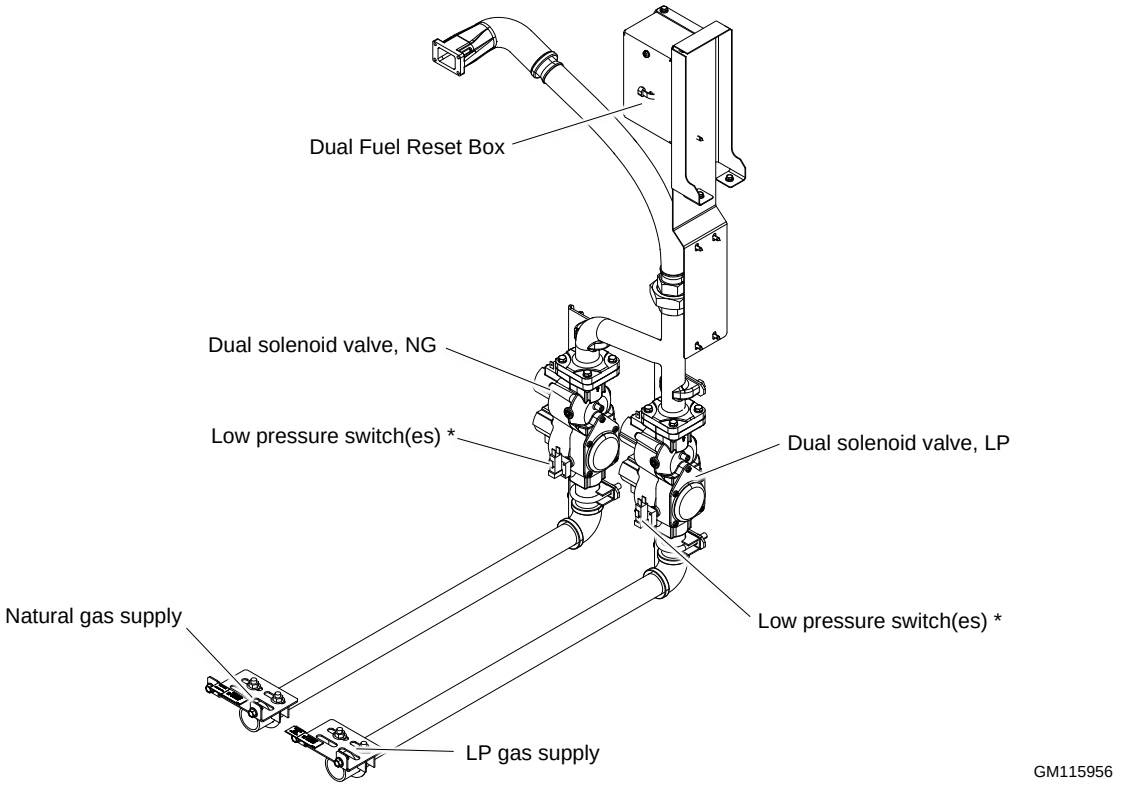

* Fuel system with optional pre-alarms shown, with two low pressure switches for NG and one for LPG.
The system without pre-alarms has one pressure switch for each fuel.

Figure 23 Dual Fuel Natural Gas and LP Gas System

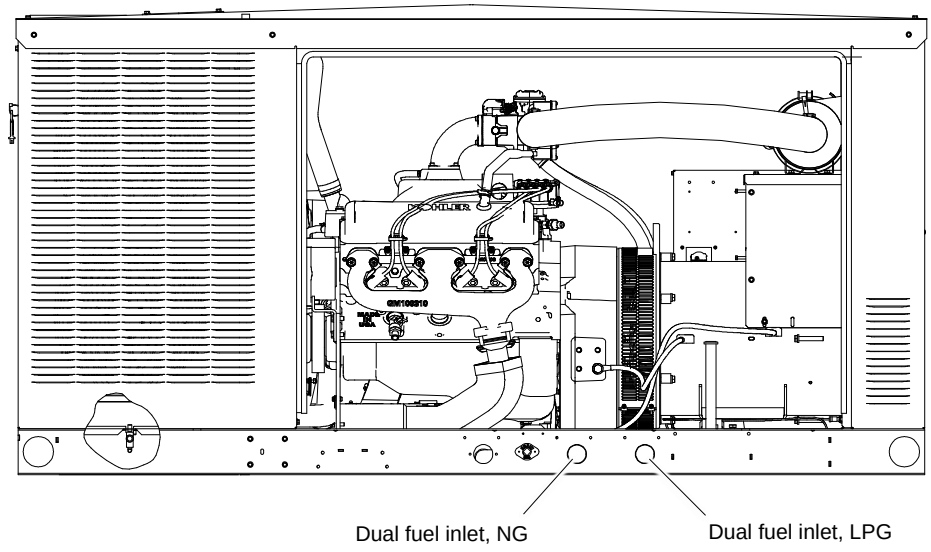

Figure 24 Fuel Inlet Connections, NG and LPG

3.5 Fuel Conversion Procedures

Note:
The Direct acting Electronic Pressure Regulator (DEPR) and air/fuel mixer are specially calibrated emission-control devices. Do not adjust the DEPR or the air/fuel mixer.

This section is not applicable to auto dual fuel changeover systems.

The generator set is easily configurable for use with either NG or LPG. System configuration for NG or LPG requires changing some electrical connections on the wiring harness. These adjustments will ensure that the proper fuel and spark timing are supplied to the engine.

Note:
The fuel type is factory preset for natural gas. When using NG, no changes are required.

Fuel Conversion Procedures

Refer to Figure 25 when changing the harness connections.

Converting from NG to LPG

1. Disconnect leads 70T/70H and N16 from fuel valve FV1. Tape these leads out of the way.
2. Connect leads 70R/70G and N28 to fuel valve FV1 as shown in Figure 25.
3. Disconnect leads 70T and 77 from fuel valve FV2. Tape these leads out of the way.
4. Connect leads 78 and 70R to fuel valve FV2 as shown in Figure 25
5. Connect lead N17 to lead 49.
6. Using the RDC2 controller or Kohler SiteTech, change the fuel type to LPG. See Figure 26.

Converting from LPG to NG

1. Disconnect lead N17 from lead 49.
2. Disconnect leads 70R/70G and N28 from fuel valve FV1. Tape these leads out of the way.
3. Connect leads 70T/70H and N16 to fuel valve FV1 as shown in Figure 25.
4. Disconnect leads 78 and 70R from fuel valve FV2. Tape these leads out of the way.
5. Connect leads 70T and 77 to fuel valve FV2 as shown in Figure 25.
6. Using the RDC2 controller or Kohler SiteTech, change the fuel type to NG. See Figure 26.

Converting the fuel will change the generator set rating. See the generator set specification sheet for ratings with natural gas and LP. Order a new nameplate with the updated rating and fuel information from a Kohler authorized dealer. Provide the following information from the original nameplate:

- Model Number
- Spec Number
- Serial Number
- Fuel (original and new)
- kW
- kVA
- Amps
- Volts
- Hz

Attach the new nameplate over the old one. Do not cover the UL listing information on the old nameplate.

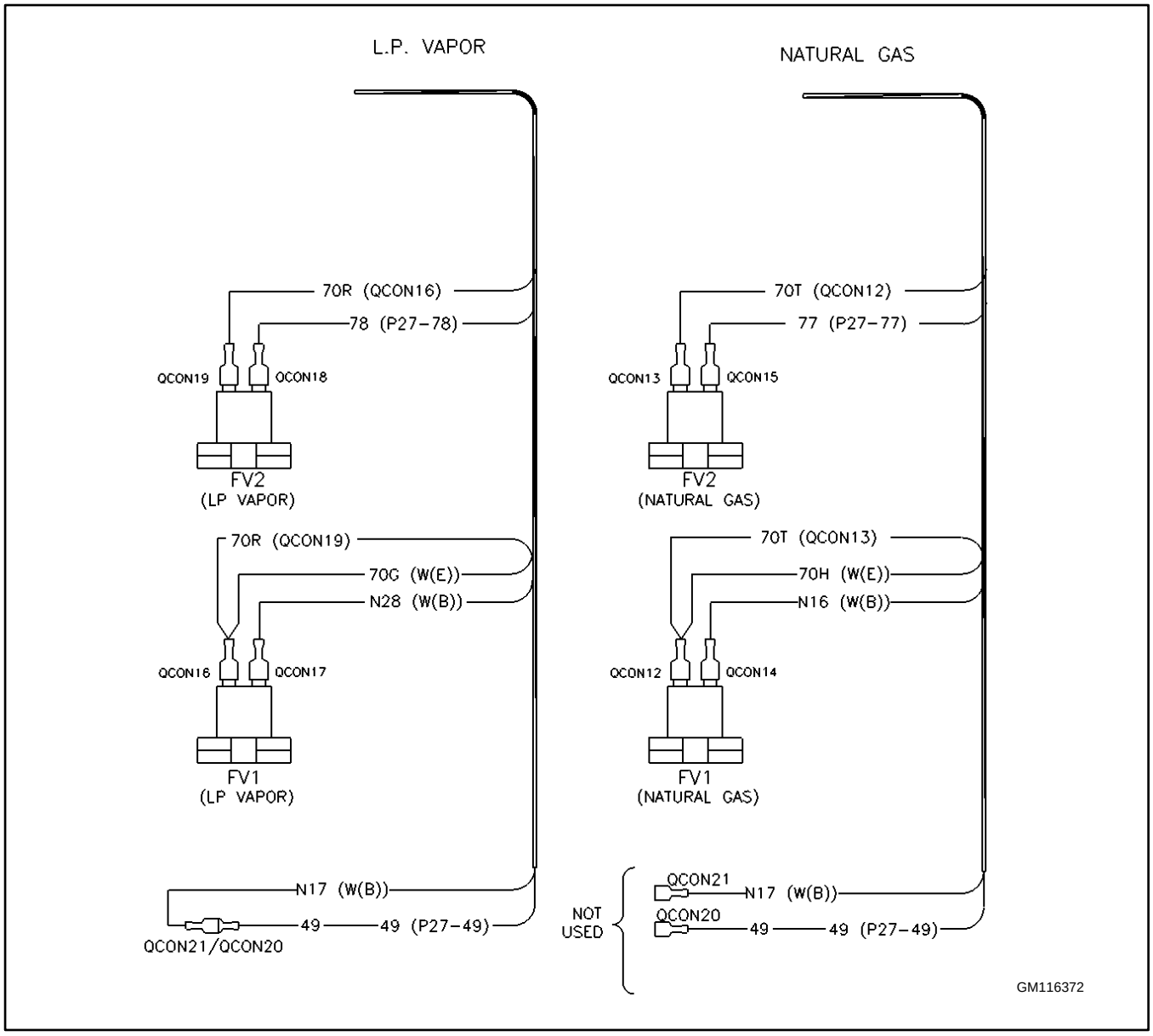

Figure 25 Harness Connections

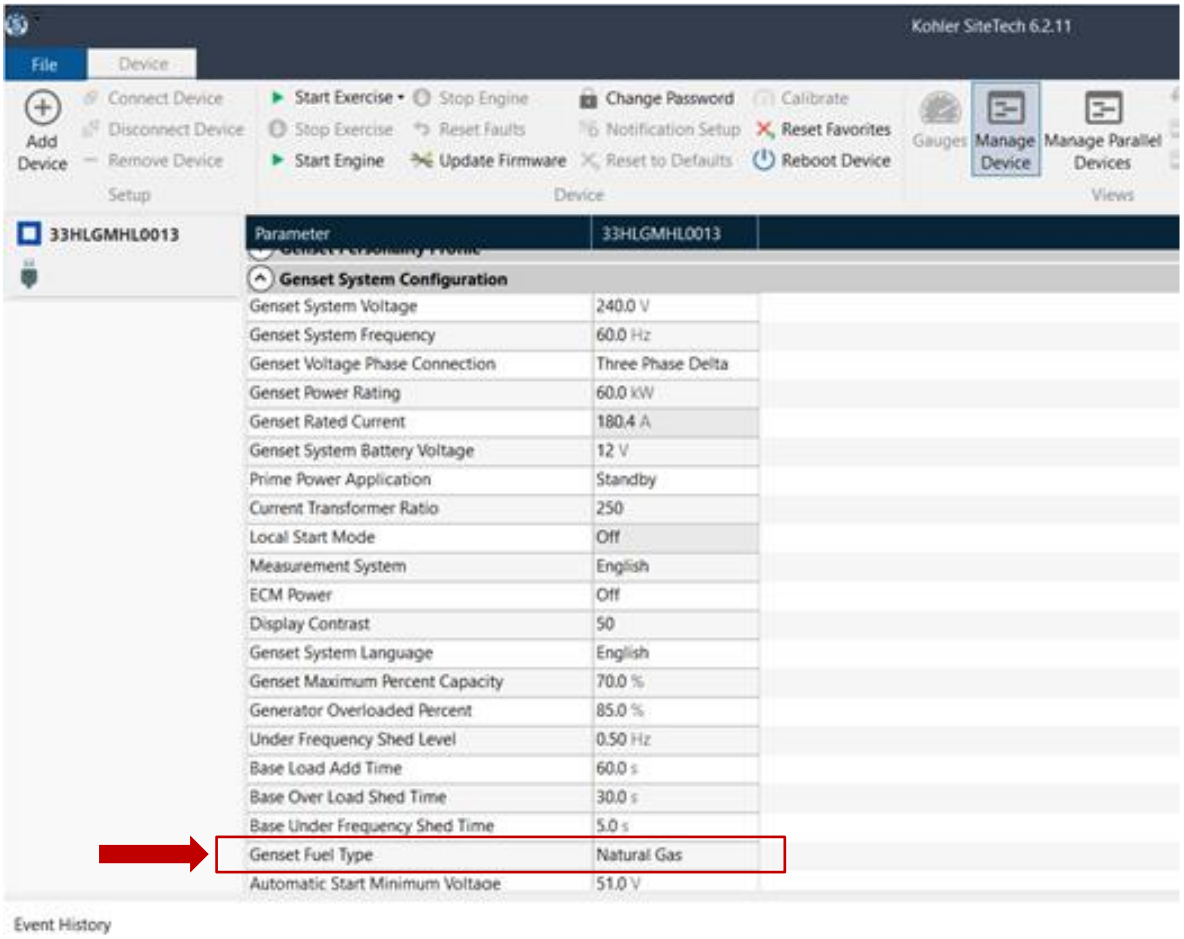

Figure 26 Using SiteTech to Change the Fuel Type

WARNING	
	Hot coolant and steam. **Can cause severe injury or death.** Before removing the pressure cap, stop the generator set and allow it to cool. Then loosen the pressure cap to relieve pressure. Fill system before starting unit.

The generator set is equipped with a unit-mounted radiator common cooling system. Add coolant before starting the generator set or energizing the block heater.

The system's major components include three electric fans, a circulating water pump, a radiator, and a thermostat. The pump circulates water through the engine until it reaches operating temperature. Then the engine thermostat opens, allowing water circulation through the radiator. The thermostat restricts water flow as necessary to prevent overcooling. The fans blow air through the radiator across the cooling surface.

Some generator sets are equipped with an optional block heater.

Note:
Block Heater Damage. The block heater will fail if the energized heater element is not immersed in coolant. Fill the cooling system before turning on the block heater. Run the engine until it is warm, and refill the radiator to purge the air from the system before energizing the block heater.

Follow the instructions below to fill the cooling system.

1. Close the radiator's coolant drain valve and tighten the hose clamps.
2. Remove the cover plate on the top of the enclosure to access the coolant fill. See Figure 28.

   Note:
   Do not add coolant to a hot engine. Adding coolant to a hot engine can cause the cylinder block or cylinder head to crack. Wait until the engine has cooled.
3. Fill the radiator with the recommended coolant mixture of 50% ethylene glycol-based long-life coolant and 50% clean, softened water to inhibit rust/corrosion and prevent freezing. See Figure 28 for coolant fill location. Do not replace the pressure cap at this time.

   Note:
   A coolant solution of 50% ethylene glycol provides freezing protection to -37˚C (-34˚F) and overheating protection to 129˚C (265˚F). A coolant solution with less than 50% ethylene glycol may not provide adequate freezing and overheating protection. A coolant solution with more than 50% ethylene glycol can cause engine or component damage. Do not mix long-life coolant and conventional coolants. Do not use alcohol or methanol antifreeze or mix them with the specified coolant.
4. Check the oil level before operating the engine.
5. Operate the engine with the radiator's pressure cap removed until the thermostat opens and the radiator upper hose becomes hot.
6. Stop the engine and allow it to cool.
7. Add coolant to the radiator to just below the overflow tube on the filler neck. See Figure 28.
8. Replace the radiator's pressure cap.
9. Maintain the coolant level in the coolant overflow bottle between the High and Low markings. See Figure 28 for the coolant overflow bottle location.

Model	Coolant Capacity, L (gal.)	
48RCLC 60RCLB	Generator Set	With Block Heater
	20.8 (5.5)	22 (5.8)

Figure 27 Coolant Capacity

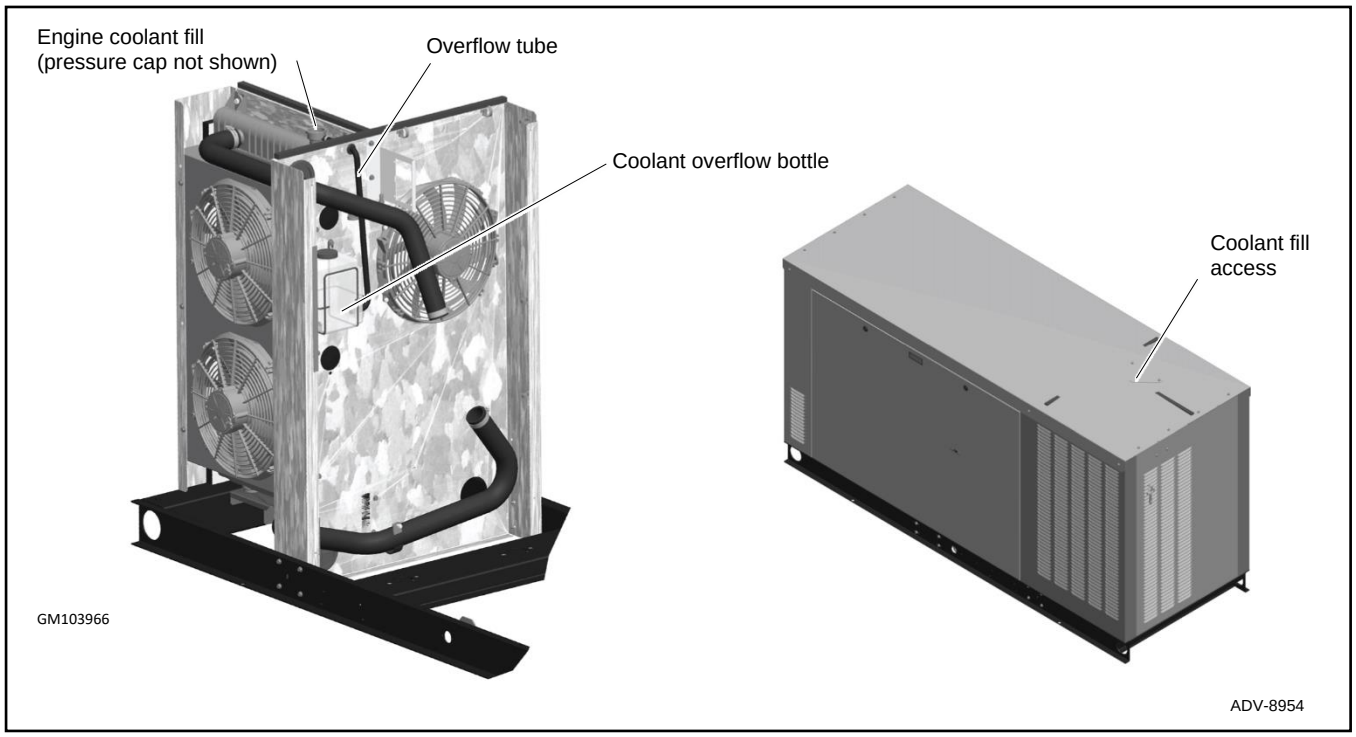

Figure 28 Cooling System Components

5.1 Prestart Installation Check

Review the entire installation sections. Inspect all wiring and connections to verify that the generator set is ready for operation. Check all items in the following Prestart Checklist.

Prestart Checklist

Air Cleaner. Check that a clean air cleaner element is installed to prevent unfiltered air from entering the engine. See the generator set operation manual for instructions.

Air Inlets. Check for clean and unobstructed air inlets.

Battery. Check for tight battery connections. Consult the battery manufacturer's instructions regarding battery care and maintenance.

Coolant Level. Check the coolant level as described in the **Cooling system** section.

Note:
Block Heater Damage. The block heater will fail if the energized heater element is not immersed in coolant. Fill the cooling system before turning on the block heater. Run the engine until it is warm, and refill the radiator to purge the air from the system before energizing the block heater.

Enclosure. Check that all enclosure panels and internal baffling are in place.

Exhaust System. Check for exhaust leaks and blockages. Check the muffler condition.

- Inspect the exhaust system components for cracks, leaks, and corrosion. Check for tight exhaust system connections.
- Check for corroded or broken metal parts and replace them as needed.
- Check that the exhaust outlet is unobstructed.

Oil Level. Maintain the oil level at or near, not over, the full mark on the dipstick.

Operating Area. Check for obstructions that could block the flow of cooling air. Keep the air intake area clean. Do not leave rags, tools, or debris on or near the generator set.

5.2 Set Exerciser

When power is applied to the RDC2 controller (that is, when the battery is connected), you will be prompted to set the date and time, and then to set the exerciser. Set the exerciser to automatically run the generator set on the desired day and time every week or every two weeks.

Figure 29 shows the controller screens. The first setting will flash. Press the Up and Down arrow buttons to change the setting. Press Select to save the setting and move on to the next. Repeat until the date, time, and exercise are set and the controller display shows the main menu. See the Generator Set Operation Manual for more detailed instructions to set the date and time and set the exerciser.

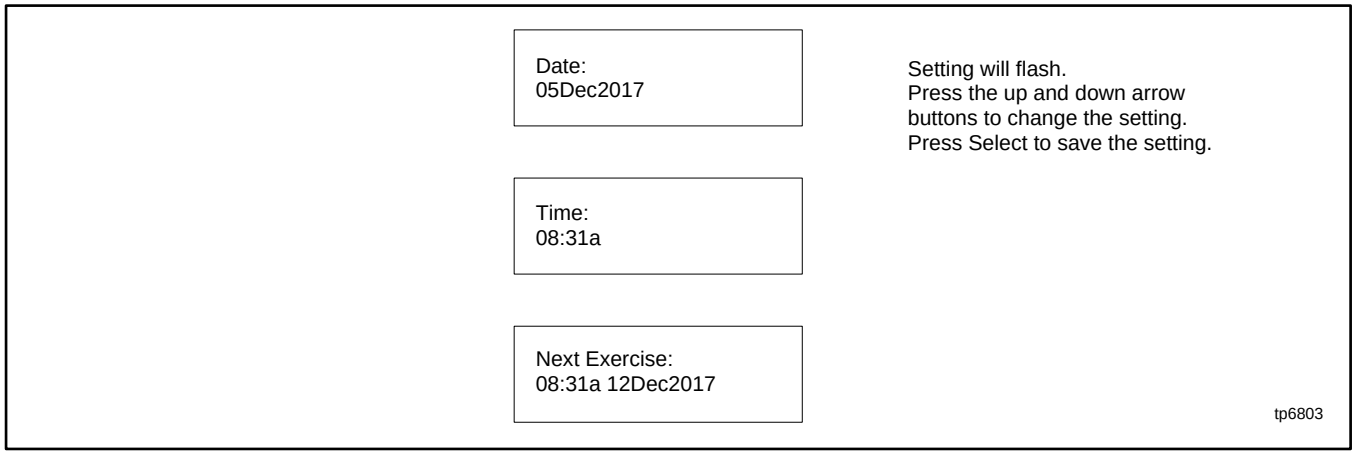

Figure 29 Set Date, Time, and Exercise, RDC2 Controller

In order to set a loaded exercise using the RDC2 controller, a Kohler® Model RXT transfer switch must be connected. To set a loaded exercise on a generator set connected to a transfer switch other than a Model RXT, use the transfer switch controller to set the exercise. Refer to the transfer switch operation manual for instructions.

The controller must be in automatic mode for the exerciser to operate as scheduled. Press AUTO to place the generator set controller into automatic mode.

5.3 Operation Test

DANGER	
	Hazardous voltage. Moving parts. **Will cause severe injury or death.** Operate the generator set only when all guards and electrical enclosures are in place.

1. Verify that all guards are in place. Install the enclosure's end panels and nonservice side door.
2. Check the items in the Prestart Checklist in the generator set operation manual.
3. Set the time and date, and then set the exerciser to run the generator set once a week or every other week to keep the generator set in good operating condition. See the generator set Operation Manual for instructions to set the date and time and set the exerciser.
4. Press the RUN button on the generator set controller to start the generator set.
5. Use a digital voltmeter (DVM) to check the output voltage from the generator set. If voltage calibration is required, refer to the **Voltage Calibration** section for instructions.
6. Press OFF to stop the engine. Then press AUTO on the RDC2 controller.
7. Install the enclosure's service-side door. Verify that all enclosure doors and panels are installed. Lock the enclosure doors to prevent unauthorized access.

5.4 OnCue Plus Generator Management System

The OnCue® Plus Generator Management System is included with the RCL generator sets and allows monitoring and control of your generator set from a personal computer, smart phone, or tablet. OnCue Plus can also be configured to send email or text message notifications in the event of a generator set fault. See the documents and manuals provided with the OnCue Plus kit for instructions.

Listed below are the minimum requirements for connecting your generator to the Internet. To use OnCue Plus, you must have:

- “Always-on” Internet service for generator set connection (for example, cable, DSL, or phone line modem connected 24 hours).
- An unused Ethernet port on a switch, router, or modem.
- An uninterruptible power supply (UPS) for the modem and router (recommended).
- 5E customer-supplied network cable for connection of the generator set to the customer’s Ethernet router (see installation instructions in the **Connect AC and DC Wiring** section) OR optional OnCue Plus Wireless kit.
- USB cable, male USB A to male mini-B, for updating the controller firmware.

For instructions to connect the network cables to the generator set, see instructions in the **Connect AC and DC Wiring** section.

Instructions to install the OnCue Plus Wireless Kit are included with the kit.

Notes

6.1 Introduction

Accessories are available factory-installed and/or shipped loose. Obtain the most current list of accessories from the generator set specification sheet or by contacting an authorized Kohler dealer.

Have accessories installed by your local authorized Kohler dealer or authorized representative. Follow the installation instructions provided with each kit.

Use separate conduit for AC and DC leads to reduce the possibility of electrical interference. Use shielded cable for all analog inputs. Verify that the leads and conduit do not interfere with the operation of the generator set or obstruct the service areas.

Refer to the wiring diagrams in the **Diagrams and Drawings** section for more information regarding generator set electrical connections.

Verify that the accessory installation complies with the National Electrical Code (NEC) and all applicable local and state codes.

The following sections list some common accessories and their functions. Follow the installation instructions provided with the kit.

DANGER	**Hazardous voltage.** **Will cause severe injury or death.** Disconnect all power sources before opening the enclosure.

WARNING	**Hot engine and exhaust system.** **Can cause severe injury or death.** Do not work on the generator set until it cools.

6.2 Battery Heaters

The battery heater kit includes a heating battery wrap to help increase the battery temperature in cold climates and a thermostat for controlled heating. The heater requires a 120 VAC, 15 amp. electrical outlet within reach of the power cord for each battery heater wrap.

Note:
Battery heaters are compatible with all Kohler-supplied lead-acid batteries.* For other battery types, check the battery manufacturer's instructions for any restrictions regarding the use of battery heaters.

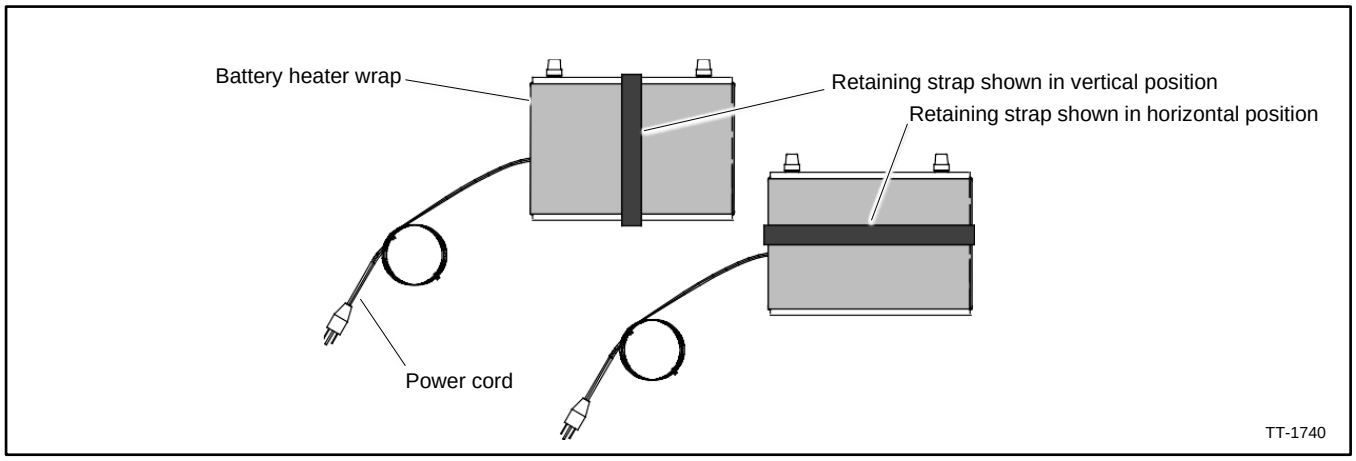

Figure 30 Typical Battery heater

6.3 Block Heaters

Block heaters are available as loose accessories. Use block heaters on standby applications where the generator set is frequently subjected to temperatures below 0º C (32º F).

The generator set engine is equipped with valves that eliminate the need to drain the cooling system before installing the block heater. Refer to the installation instructions provided with the block heater kit.

Connect the block heater to a power source that is energized when the generator set is not running.

Note:
Block Heater Damage. The block heater will fail if the energized heater element is not immersed in coolant. Fill the cooling system before turning on the block heater. Run the engine until it is warm, and refill the radiator to purge the air from the system before energizing the block heater.

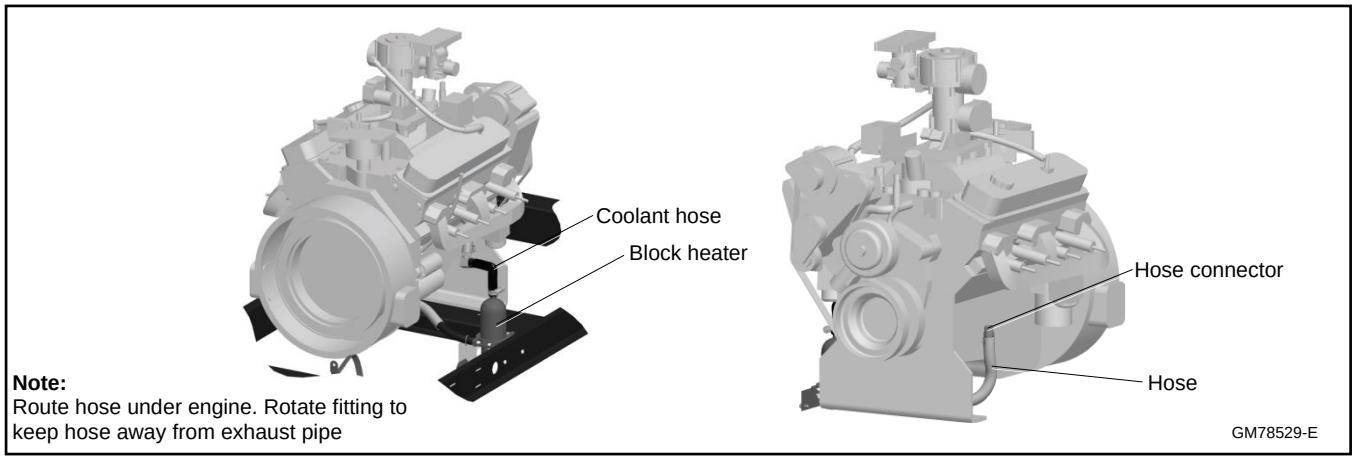

Figure 31 Block heater

* Battery heaters are not recommended for OPTIMA batteries, which are supplied for some applications. OPTIMA BATTERIES is a registered trademark of Johnson Controls, Inc.

6.4 Emergency Stop Kits

The emergency stop (E-stop) switch allows immediate shutdown of the generator set from a remote location. The E-stop assembly includes a shroud that allows the installation of a lockout/tagout device to lock the switch in the stop position. See Figure 32. Mount the emergency stop switch(es) outside of the generator set enclosure, in accordance with NEC requirements.

When the emergency stop switch is activated, contacts in the switch open to shut down the generator set. Connect as many emergencies stop switches as required. Connect multiple switches in series to ensure that activating any one of the stop switches will stop the generator set.

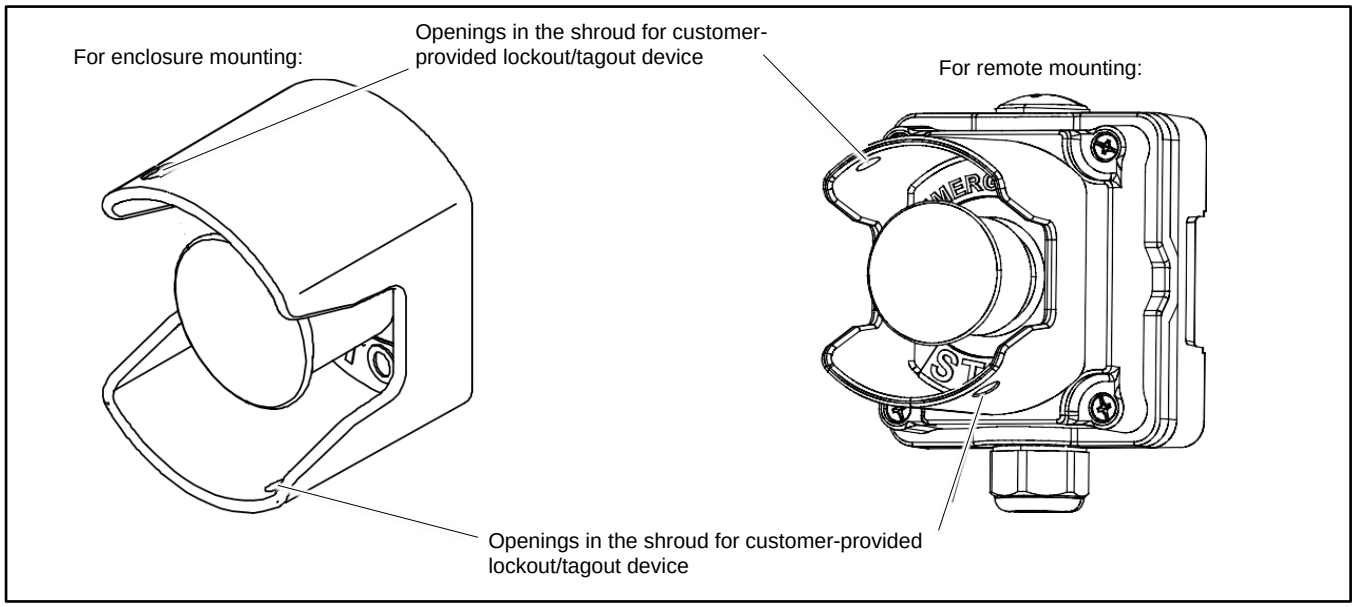

Figure 32 Emergency Stop Switches

6.5 Load Management

Two optional load management devices are available for use with single-phase generator sets and a model RXT or RDT transfer switch.

- The optional Load Shed Kit mounts inside a model RDT or RXT transfer switch. Figure 33 shows the load shed assembly.
- The combined interface/ load management board is available for the Model RXT transfer switch.

The devices provide an automatic load management system to comply with Section 702.5 of NEC 2008.

Note:
The load management devices are only compatible with single-phase generator sets.

With a load management system, less critical appliances can be powered by the generator set when the more important appliances are not running, allowing the use of a smaller generator set than would be needed to run all of the building's electrical equipment at the same time.

The load management device automatically manages up to six residential loads.

- Two relays are included to control two independent heating, ventilation, and air conditioning (HVAC) loads.
- Up to four power relay modules can be connected through normally open relay contacts on the circuit board. Power relay modules are available separately. See the **Power Relay Module** section.

The load management device receives commands from the RDC2 generator controller and energizes or de-energizes the appropriate load relays to add or shed non-critical loads according to their priority.

Note:
Connect only non-essential loads to the load shed kit.

An adequate electrical supply is required for operation of the customer-supplied power relays connected to the load shed kit. Check the electrical requirements of the customer-provided equipment prior to installation to determine the wire size and circuit protection required. The installer is responsible for ensuring that the power system installation complies with all applicable state and local codes.

For detailed installation and connection instructions, see TT-1609, provided with the load shed kit, or the Operation/Installation Manual for the Model RXT transfer switch.

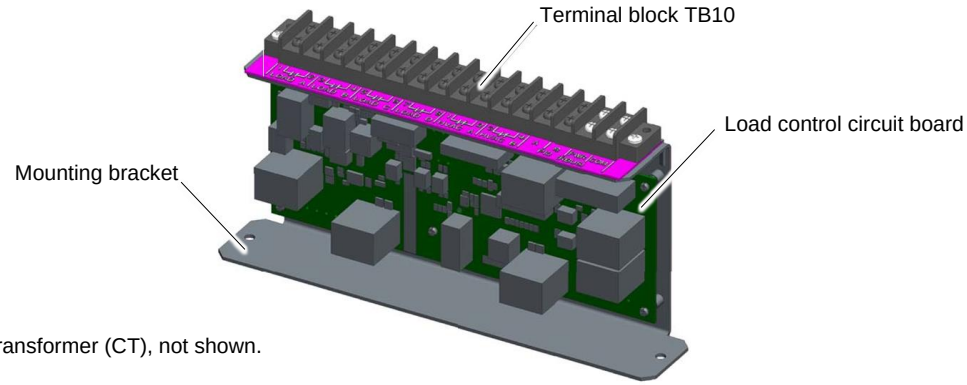

Figure 33 Load Shed Assembly GM88281-1 (mounts inside the transfer switch enclosure)

6.5.1 Power Relay Module

The power relay module kit contains one 50 amp relay with connecting lugs in a NEMA type 3R enclosure. Connect up to four (4) power relay modules to the load management devices listed above.

The power relay modules can be mounted indoors or outdoors. Two (2) 120 VAC loads (shed simultaneously) or a single 240 VAC load can be wired to each relay.

For detailed installation and connection instructions, see TT-1646, provided with the power relay module kit.

Figure 34 Power Relay Module

6.6 OnCue Plus Wireless Kit

The OnCue® Plus Wireless Kit allows connection of residential/light commercial generator sets to the customer's Internet router without running a network cable from the customer's computer router to the generator set. Use this kit to connect the generator set to the Internet for the Kohler® OnCue® Plus Generator Management System.

The kit uses two wireless bridges that communicate with each other. One wireless bridge is installed inside the generator enclosure and powered by the generator's engine starting battery. The second wireless bridge is installed near the customer's router and connected to 120 VAC power.

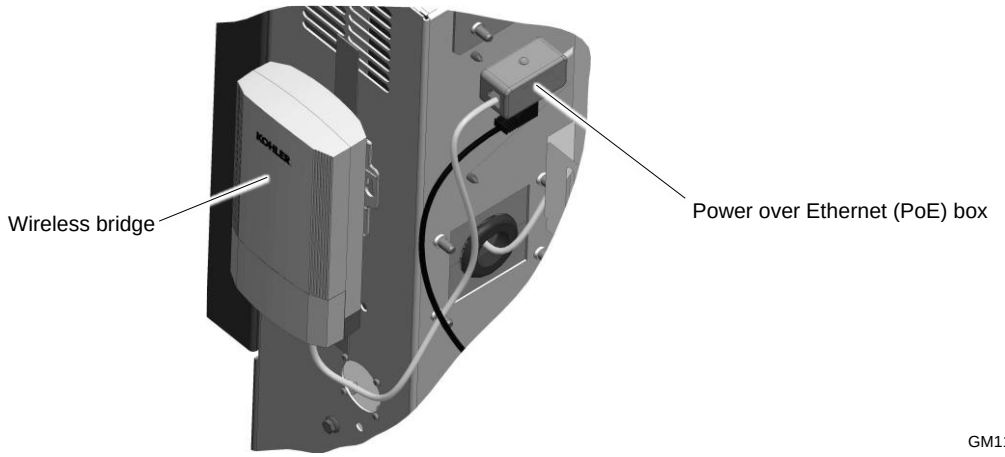

Figure 35 Wireless Bridge (kit includes qty 2; mounting location may vary)

6.7 Programmable Interface Module (PIM)

The optional Programmable Interface Module (PIM) provides two programmable inputs and six dry contact outputs, four of which are programmable. The PIM with enclosure is shown in the Programmable Interface Module (PIM) figure (covered removed for illustration). See TT-1584 for PIM installation and connection instructions.

The PIM is mounted in a NEMA 3R aluminum enclosure, which can be mounted indoors or outdoors. See the **Accessory Module RBUS Communication Connections** section and the installation instructions provided with the PIM for the maximum recommended cable lengths and detailed installation instructions.

6.7.1 PIM to Generator Set Connections

The PIM communicates with the RDC2 generator set controller. Connect the PIM module to the generator set as shown in the **Accessory Module RBUS Communication Connections** section.

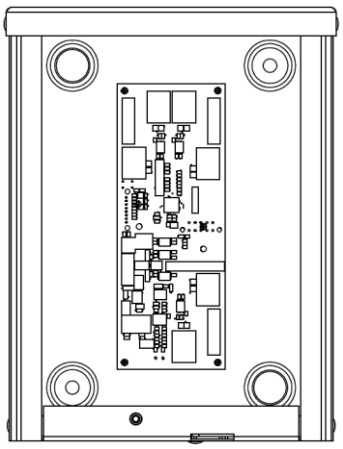

Figure 36 Programmable Interface Module (PIM) (covered removed for illustration)

6.7.2 PIM Inputs and Outputs

Connect customer-supplied equipment to the PIM as instructed in TT-1584.

Factory-default settings for the outputs are shown in Figure 37. The outputs are controlled by the RDC2 controller. The run output is activated when the generator set is running. The common fault output is activated on a fault.

Use a personal computer running Kohler® OnCue® Plus or SiteTech™ software to assign functions to the other inputs and outputs, and/or change the settings for factory-set inputs and outputs. Verify that the input and output assignments match the connections to the PIM terminal strip.

Outputs 3 through 6 can also be controlled remotely using the OnCue® Plus program. If an output is activated or deactivated through OnCue Plus, it is no longer controlled by the RDC2 controller. See the OnCue Plus Manual for instructions.

PIM Connection	Factory Default Setting
Input 1	None
Input 2	None
Output 1 (Relay 1)	Run
Output 2 (Relay 2)	Common Fault
Output 3 (Relay 3)	Low Battery Voltage (programmable)
Output 4 (Relay 4)	Not in Auto (programmable)
Output 5 (Relay 5)	Cooldown (programmable)
Output 6 (Relay 6)	Normal Source Failure (programmable)

Figure 37 PIM Factory Settings

WARNING	
	Accidental starting. **Can cause severe injury or death.** Disconnect the battery cables before working on the generator set. Remove the negative (–) lead first when disconnecting the battery. Reconnect the negative (–) lead last when reconnecting the battery.

Disabling the generator set. Accidental starting can cause severe injury or death. Before working on the generator set or equipment connected to the set, disable the generator set as follows: (1) Move the generator set master switch to the OFF position. (2) Disconnect the power to the battery charger. (3) Remove the battery cables, negative (–) lead first. Reconnect the negative (–) lead last when reconnecting the battery. Follow these precautions to prevent starting of the generator set by an automatic transfer switch, remote start/stop switch, or engine start command from a remote computer.

DANGER	
	Hazardous voltage. Moving parts. **Will cause severe injury or death.** Operate the generator set only when all guards and electrical enclosures are in place.

Grounding electrical equipment. Hazardous voltage will cause severe injury or death. Electrocution is possible whenever electricity is present. Ensure you comply with all applicable codes and standards. Electrically ground the generator set, transfer switch, and related equipment and electrical circuits. Turn off the main circuit breakers of all power sources before servicing the equipment. Never contact electrical leads or appliances when standing in water or on wet ground because these conditions increase the risk of electrocution.

Short circuits. Hazardous voltage/current will cause severe injury or death. Short circuits can cause bodily injury and/or equipment damage. Do not contact electrical connections with tools or jewelry while making adjustments or repairs. Remove all jewelry before servicing the equipment.

7.1 Voltage Reconnection

The following instructions explain the reconnection of 12-lead generator sets to a different voltage configuration.

Only trained and qualified personnel should perform the reconnection procedure. The reconnection procedure explains voltage reconnections only. Do not attempt to change the frequency (e.g. from 60 Hz to 50 Hz) in the field. In all cases, follow the National Electrical Code (NEC) guidelines.

Reconnect the stator leads of the generator set if a different output phase or voltage is desired. Refer to the following procedure and the connection schematics. Follow all safety precautions at the front of this manual and in the text while performing this procedure.

Note:
Order voltage reconnection decal 246242 from an authorized dealer and affix decal to generator set after reconnecting to a voltage different than the nameplate.

7.2 Four-Lead (Singal-Phase) Generator Sets

Figure 38 shows the factory connection for the single- phase 120/240 V 60 Hz generator set. Four-lead, single-phase models are not reconnectable.

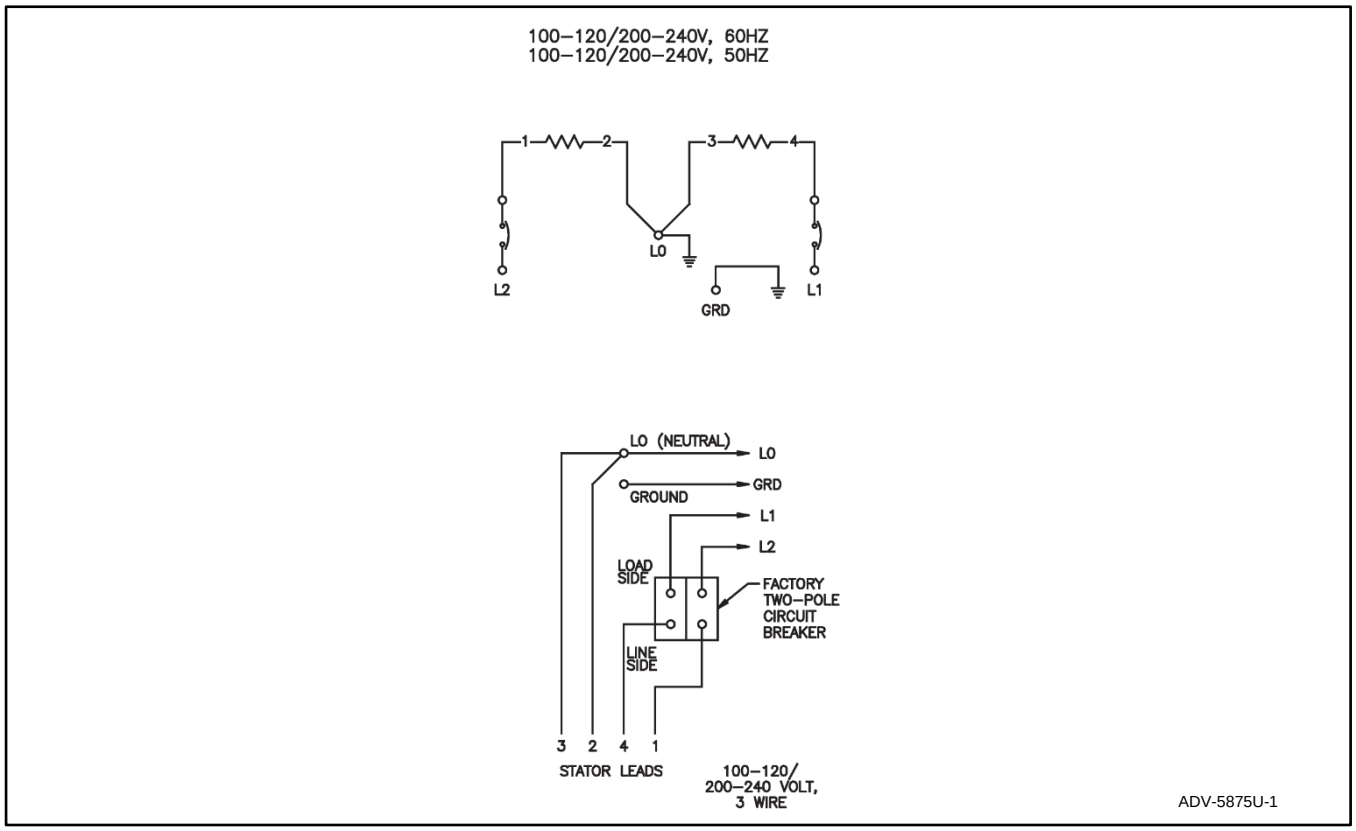

Figure 38 Single-Phase Factory Connection, 120/240 V 60 Hz

7.3 12-Lead (Three-Phase) Generator Sets

Three-phase, 12-lead generator sets are reconnectable to the voltages and phases shown on the generator set specification sheet. See Figure 39 and Figure 40 for the applicable three-phase configurations and single-phase dogleg configuration. Use the following procedure to reconnect the generator to the desired voltage configuration, change the system voltage setting, and adjust the output voltage.

Note:
Equipment damage. Verify that the voltage ratings of the transfer switch, line circuit breakers, and other accessories match the selected line voltage.

Reconnection Procedure

1. Press the OFF button on the RDC2 controller.
2. Disconnect engine starting battery, negative (-) lead first.
3. Disconnect utility power to the generator set.
4. Verify that the line circuit breaker is sized correctly for the new voltage and amperage. Replace the circuit breaker if necessary.
5. Select desired voltage connection. See Figure 39 and Figure 40. Connect the leads according to the diagram for desired phase and voltage.
6. Reconnect generator set engine starting battery, negative (-) lead last.
7. Follow the instructions in the **Changing System Settings** section to enter the RDC2 Genset System menu. Check the system voltage, frequency, and phase settings, and change them if necessary.
8. Connect a digital multimeter (DVM) to the generator set output.
9. Press RUN to start the generator set.
10. Use a voltmeter to check for the correct voltage output from the generator set. Follow the instructions in the **Voltage Calibration** section to calibrate the voltage on the RDC2 controller, if necessary.
11. Press OFF to stop the generator set.
12. Reconnect utility power to the generator set.
13. Press AUTO to place the generator set in automatic mode.

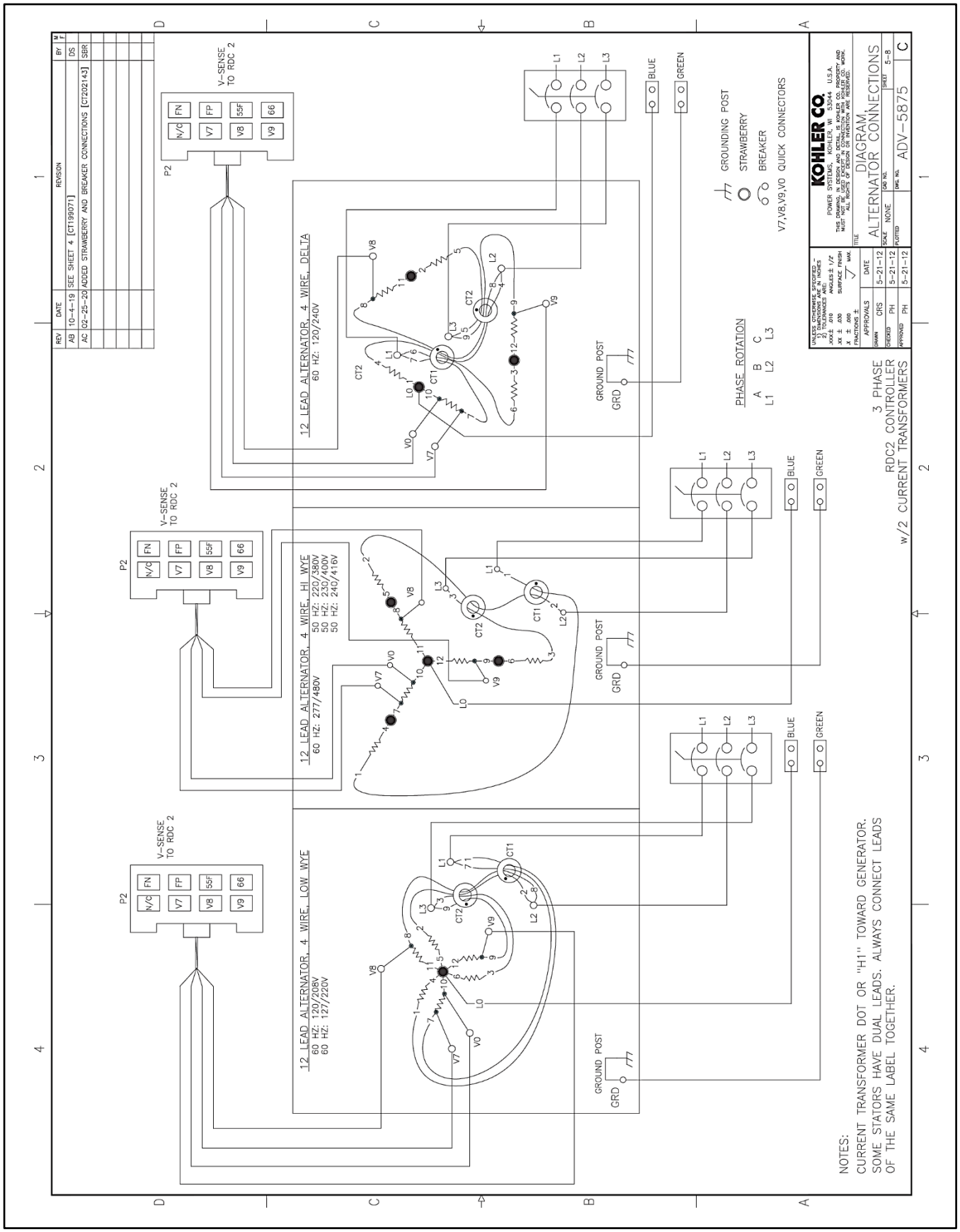

Figure 39 12-Lead Generator Reconnection, 1 of 2

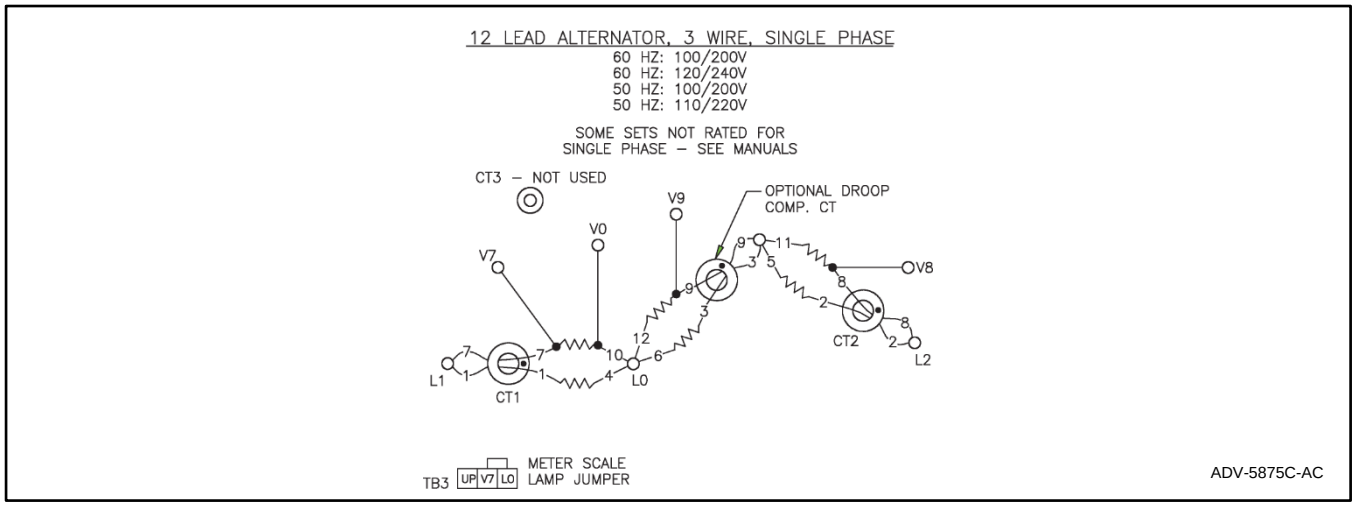

Figure 40 12-Lead Generator Reconnection, 2 of 2

7.4 Changing System Settings

The RDC2 controller's keypad and display allow the installer to check and change the generator system settings, if necessary. The system settings for each generator model are set at the factory and should not normally require changes. Check the genset system settings and change them, if necessary, after generator reconnection or controller replacement.

The following procedure explains how to change the system settings. The procedure is also illustrated in Figure 43.

Procedure to Change System Settings

1. Press the Select button to enter the main menu. See Figure 41 and Figure 42. The Overview screen will be displayed.
2. Press the down arrow button to navigate to the Genset System menu. See Figure 42.
3. Press the Select button to enter the Genset System menu. See Figure 43.
4. Press the down arrow button to step through the generator set system settings to the setting that you wish to change.
5. When the setting is displayed (for example, System Voltage), press the select button. The value will flash.
6. Press the up or down arrow buttons to increase or decrease the setting.
7. When the desired setting is shown, press Select. The value stops flashing and the new setting is saved.
8. Press the down arrow to step to the next setting.
9. To exit, press the down arrow button until Return is displayed. Press the Select button to exit the menu.
10. Press the AUTO or OFF button to exit the main menu.

Note:
If no buttons are pushed, the controller exits the menus and returns to the generator set status display after 5 minutes.

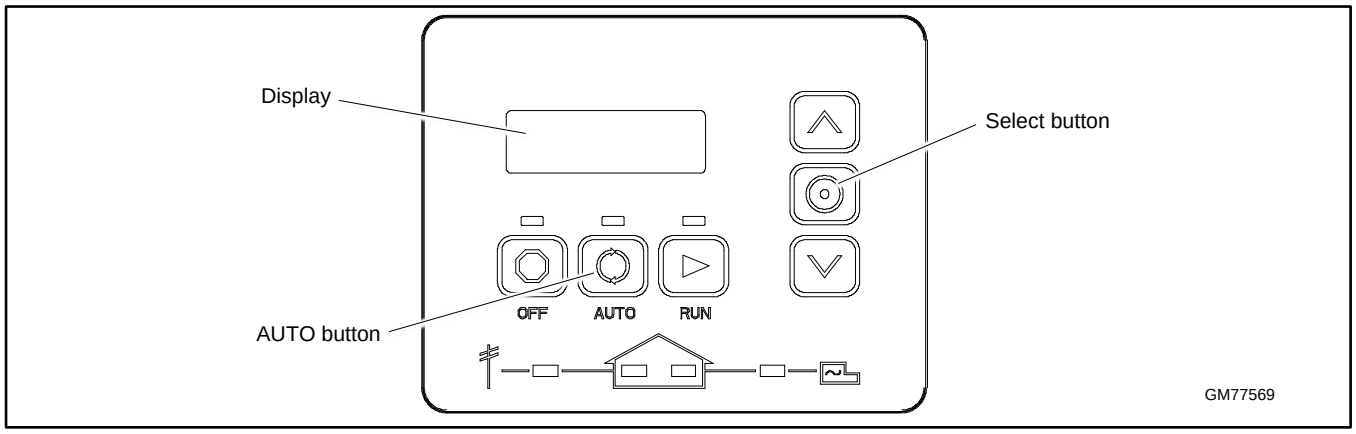

Figure 41 RDC2 Controller User Interface

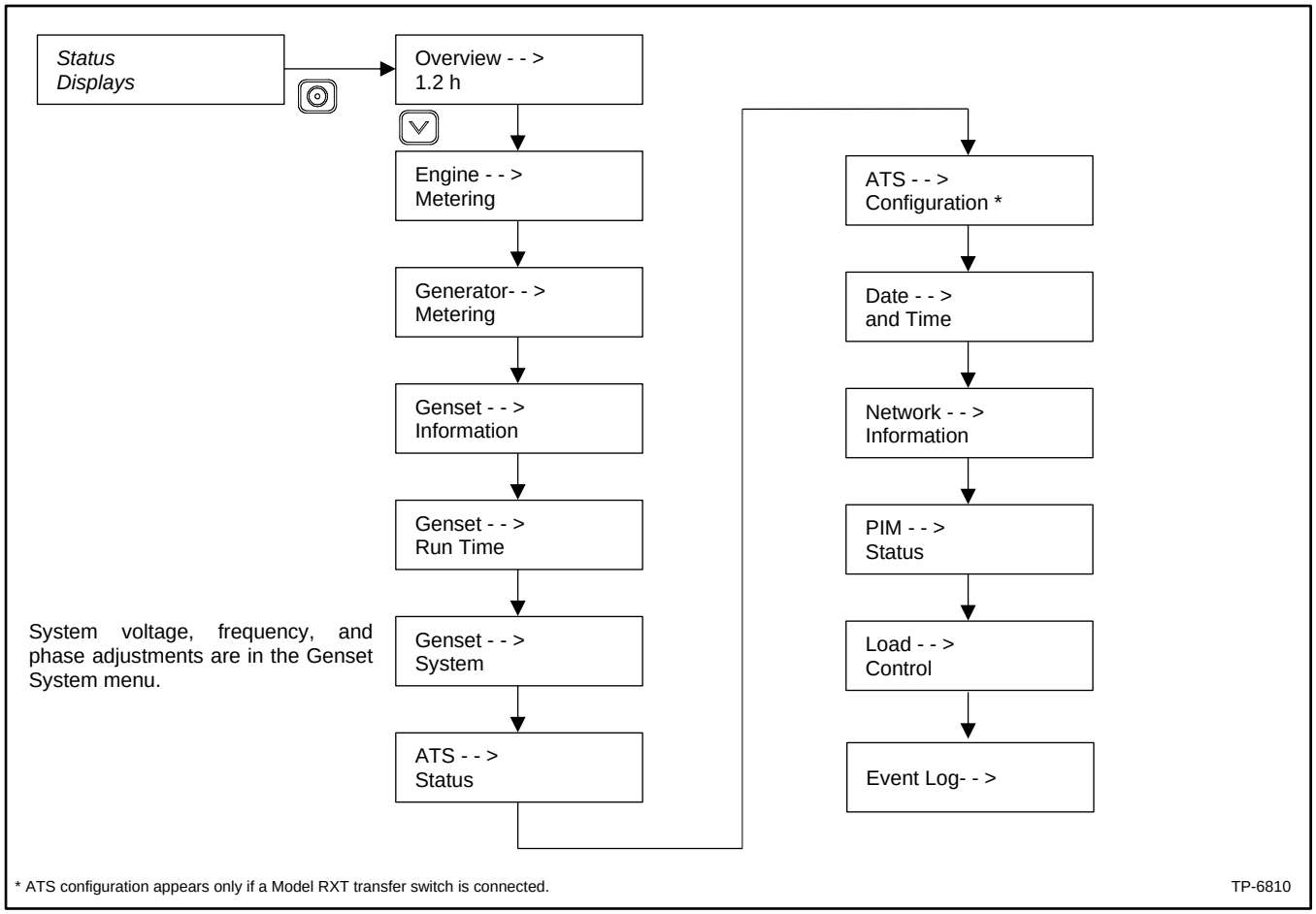

Figure 42 RDC2 Main Menu

Changing System Settings on the RDC2 Controller

1. Press the Select button to enter the main

Press: **Display:** Overview - - >
1.2 h

2. Press the down arrow button to navigate to the Genset System menu. See Figure 43.

Press: **Display:** Genset - - >
System

3. Press the Select button to enter the genset system menu.

Press: **Display:** System Voltage:
240 V

4. Press the down arrow button, if necessary, to step to the setting that you want to change.
5. When the setting is displayed (for example, System Voltage), press the select button. The value will flash.

Press: **Display:** System Voltage
240 V

6. Press the up or down arrow buttons to increase or decrease the setting.

Press: **Display:** System Voltage
220 V

7. When the desired setting is shown, press Select. The value stops flashing.

Press: **Display:** System Voltage:
220 V

8. Press the down arrow to step to the next setting.

Press: **Display:** System Freq:
60 Hz

9. To exit, press the down arrow button until return is displayed.

Press: **Display:** Return - - >

10. Press the Select button to exit the menu.

Press: **Display:** Overview - - >
1.2 h

11. Press Auto to signal the controller to exit the menus and return to the generator set status display.

Press: **Display:** Genset State
Standby

Note:
If no buttons are pushed, the controller returns to the status display after 5 minutes.

Figure 43 Changing Genset System Settings

7.5 Voltage Calibration

DANGER

Hazardous voltage. Moving parts.
Will cause severe injury or death.

Operate the generator set only when all guards and electrical enclosures are in place.

Testing live electrical circuits. Hazardous voltage or current will cause severe injury or death. Have trained and qualified personnel take diagnostic measurements of live circuits. Use adequately rated test equipment with electrically insulated probes and follow the instructions of the test equipment manufacturer when performing voltage tests. Observe the following precautions when performing voltage tests: (1) Remove all jewelry. (2) Stand on a dry, approved electrically insulated mat. (3) Do not touch the enclosure or components inside the enclosure. (4) Be prepared for the system to operate automatically. *(600 volts and under)*

Short circuits. Hazardous voltage/current will cause severe injury or death. Short circuits can cause bodily injury and/or equipment damage. Do not contact electrical connections with tools or jewelry while making adjustments or repairs. Remove all jewelry before servicing the equipment.

Correct voltage calibration is necessary for proper generator set operation. Check the voltage calibration after controller replacement or generator set reconnection, and adjust if necessary.

The RDC2 controller can be calibrated using the controller keypad and menus, or using a personal computer with Kohler® SiteTech™ software.

7.5.1 Calibration using the RDC2 Controller Keypad and Menus

The controller's voltage calibration can be adjusted using the controller keypad. See Figure 44 and follow the procedure below.

Note:
A digital voltmeter is required for these adjustments.

1. With the generator set off, connect a digital multimeter to measure output voltage across L1 and L2. Set the meter to measure AC volts.
2. Start the generator set by pressing the RUN button on the RDC2 controller.
3. On the RDC2 controller, press the Select button and then use the arrow buttons to navigate to the Generator Metering menu on the RDC2 controller.
4. Press the Select button to display Volts L1-L2. Compare the number displayed with the voltmeter reading.
5. If the correct voltage is not displayed, follow these steps to adjust it:
    a. Press the Select button. The voltage will flash.
    b. Press the up or down arrow button to adjust the voltage to match the voltmeter reading.
    c. Press Select to save the voltage setting. The voltage stops flashing.
    d. Wait for the voltmeter reading to stabilize. This may take 30 to 60 seconds.
6. For three-phase models, press the Down arrow button and repeat the calibration procedure for voltage across L2- L3 and L3- L1.
7. Use the arrow buttons to step down to the Return screen. Press Select to exit the Generator Metering menu.
8. Press OFF to stop the generator set.

Reset Calibration

Pressing the select button when “Reset Calibration? Yes” is displayed will discard the changes and reset the calibration to the original settings. See Figure 44.

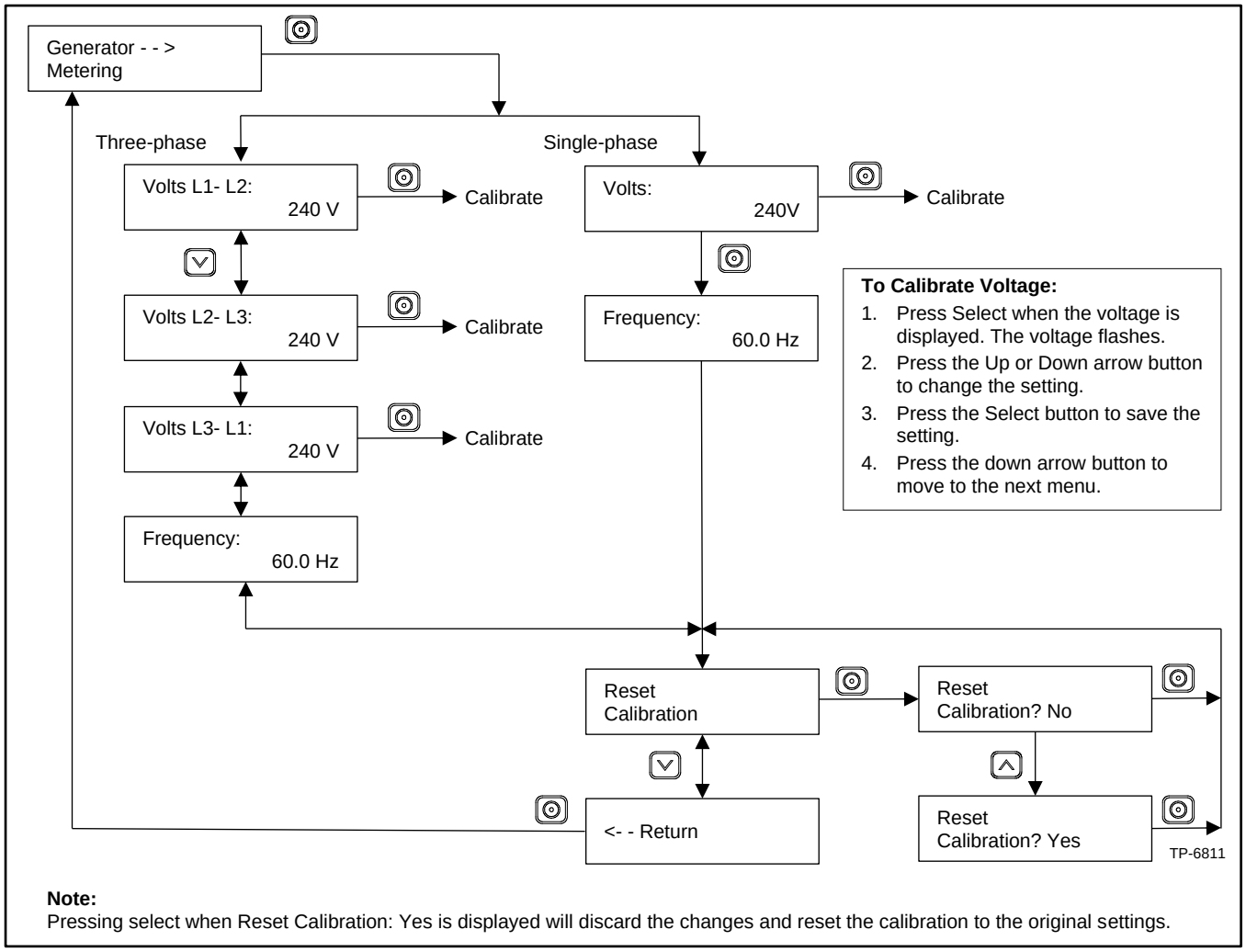

Note:
Pressing select when Reset Calibration: Yes is displayed will discard the changes and reset the calibration to the original settings.

Figure 44 Voltage Calibration

7.5.2 Calibration Using SiteTech

Note:
Read all safety precautions at the beginning of the **Voltage Calibration** section before performing the calibration procedure.

Voltage calibration factors can be adjusted using SiteTech software to calibrate the RDC2 controller. Connect a personal computer (laptop) to the controller using a USB cable and follow this procedure to use Kohler® SiteTech™ software to calibrate the controller.

The voltage calibration factors are located in the Genset Calibration group in SiteTech™. Find the parameter labelled Genset Calibration Factor Voltage, L1- L2. See Figure 46.

Note:
A digital voltmeter is required for these adjustments.

1. With the generator set off, connect a digital multimeter to measure output voltage across L1 and L2. Set the meter to measure AC volts.
2. Start the generator set by pressing the RUN button on the RDC2 controller.
3. Compare the voltage reading on the digital voltmeter to the voltage displayed by the controller.
4. If the voltage displayed on the controller does not match the measured voltage, use the equation in Figure 45 to calculate a new value for Genset Calibration Factor Voltage, L1- L2.
5. Type the new value for Genset Calibration Factor Voltage, L1- L2 into SiteTech and click on Apply Changes. See Figure 46.
6. Allow a few seconds for the controller to adjust to the new factor and then compare the voltmeter reading with the voltage displayed on the controller.
7. If the voltage readings do not match, check your calculations. Check the calibration factor and both voltage readings again. Repeat the procedure using the new values, if necessary.

Note:
If you would like to simplify the calculation, set the calibration factor to 1.0000 and then repeat the calibration procedure from step 3.

8. Repeat the procedure for voltage across L2- L3 and L3- L1, if necessary. (Three-phase only.)
9. Press OFF to stop the generator set.

$$(\mathbf{V}_{meter} \div \mathbf{V}_{control}) \times F_{old} = F_{new}$$

$\mathbf{V}_{meter}$ = Voltmeter reading
$\mathbf{V}_{control}$ = Voltage displayed on controller
$\mathbf{F}_{old}$ = Genset Calibration Factor Voltage, L1- L2, from SiteTech before calibration
$\mathbf{F}_{new}$ = New value to enter for Genset Calibration Factor Voltage, L1- L2, in SiteTech

Example:
Voltmeter reading: 241.2
Controller display: 240
Old calibration factor (from SiteTech): 1.0063
New calibration factor:
(241.2 ÷ 240) x 1.0063 = 1.0113

Figure 45 Voltage Calibration Factor

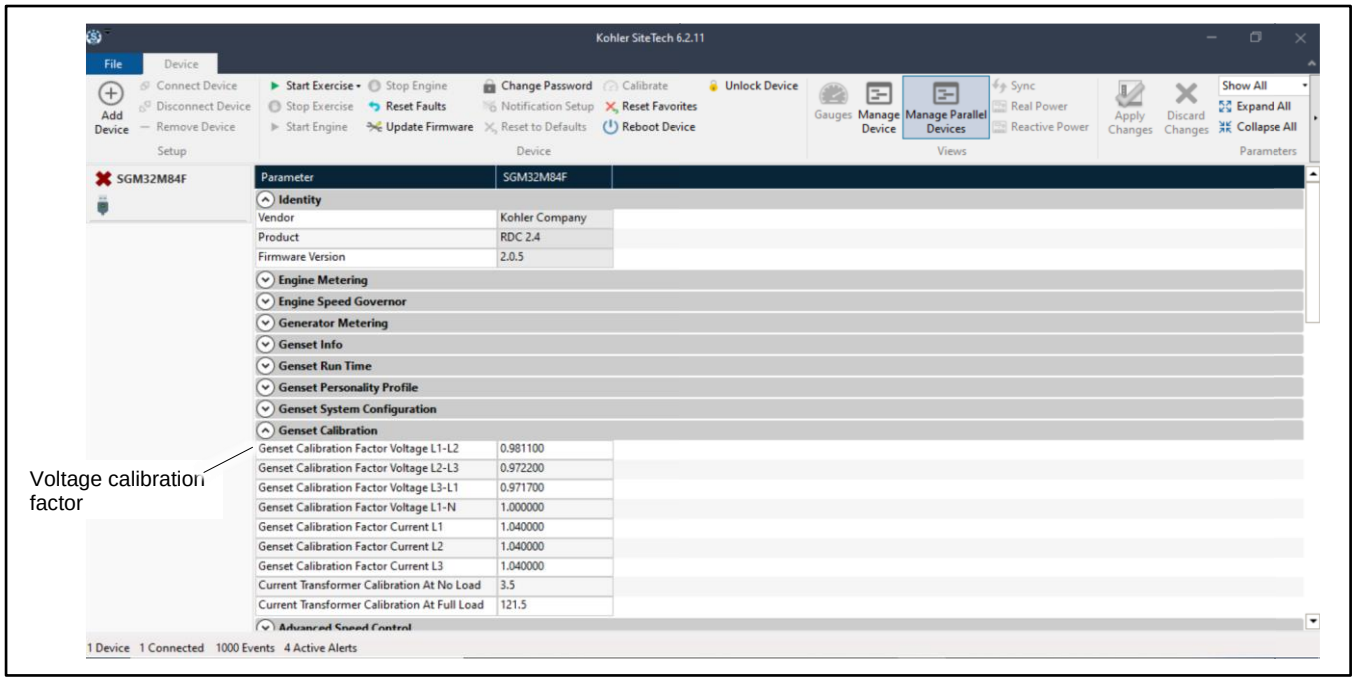

Figure 46 Voltage Calibration Factor in SiteTech™

Notes

Section 8. Diagrams and Drawings

This section contains dimension drawings, wiring diagrams, and schematics for the enclosed generator set. Figure 47 lists the drawing numbers and page numbers. See the generator set Operation Manual for service views, if necessary.

Drawing Description	Drawing Number	Page
Dimension Drawing:		
Dimensions	ADV-9760C-1	69
Installation clearances	ADV-9760C-2	70
Wiring Diagrams:		
Schematic:		
Sheet 1	ADV-9762E-1	71
Sheet 2	ADV-9762E-2	72
Sheet 3	ADV-9762E-3	73
Sheet 4	ADV-9762E-4	74
Wiring Diagram:		
Sheet 1	GM116372F-1	75
Sheet 2	GM116372F-2	76
Sheet 3	GM116372F-3	77
Sheet 4	GM116372F-4	78

Figure 47 Drawing Numbers and Locations

Notes

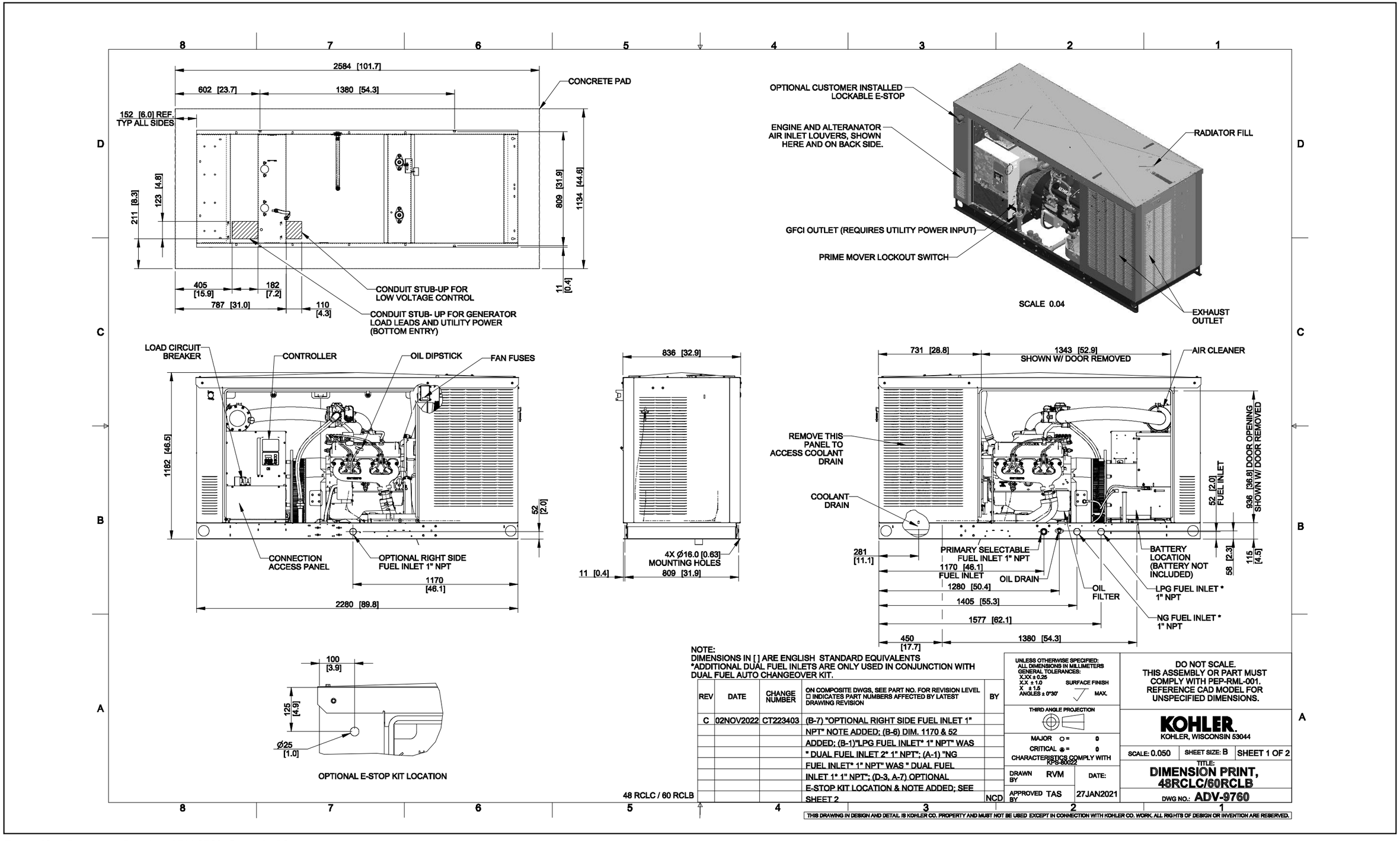

Figure 48 Dimension Drawing, ADV-9760, Sheet 1 of 2

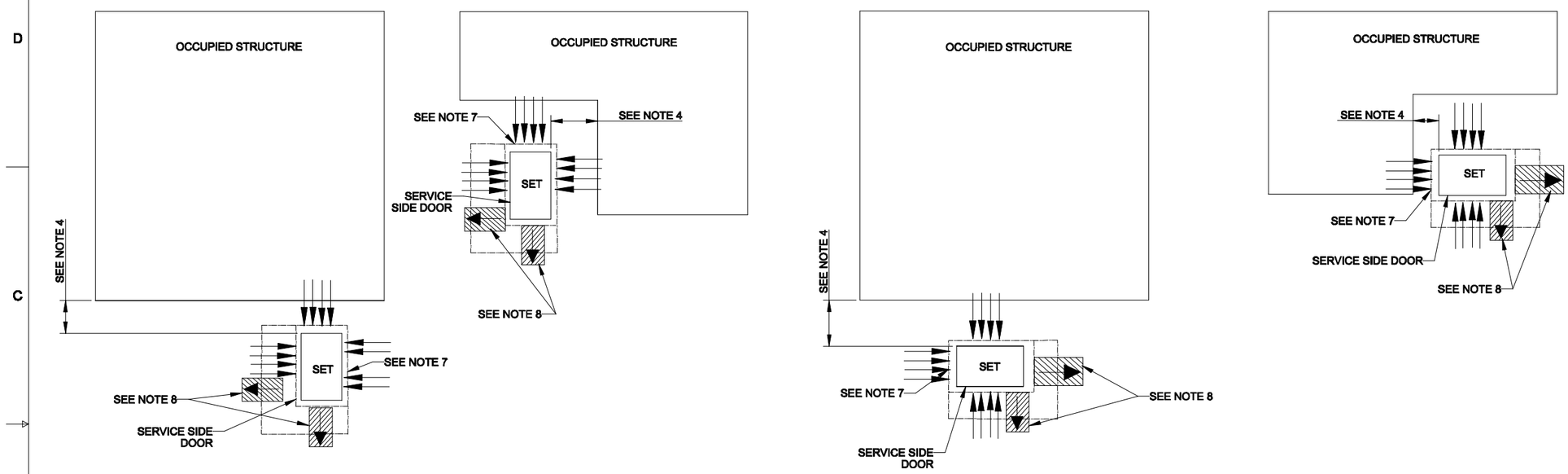

INSTALLATION GUIDELINES

1) EXHAUST IS AIMED AWAY FROM OR PARALLEL TO THE STRUCTURE.

2) EXHAUST IS NOT DIRECTED AT PLAY AREAS, PATIOS OR OTHER AREAS WHERE PEOPLE CONGREGATE.

3) THE NEAREST WINDOW, VENT, DOOR OR SIMILAR STRUCTURE OPENING IS AT LEAST 5 FEET FROM THE EXHAUST END OF THE GENERATOR.

4) GENERATOR SET MUST BE INSTALLED A MINIMUM OF 18 INCHES FROM STRUCTURE PER NFPA 37, HOWEVER, ACTUAL DISTANCE MAY DIFFER BASED ON STATE AND LOCAL CODES.

5) WINDOWS & DOORS ON ADJACENT WALLS ARE CLOSED.

6) FURNACE AND OTHER SIMILAR INTAKES ARE AT LEAST 10 FEET FROM EXHAUST END OF GENERATOR.

7) 4" THICK CONCRETE PAD EXTENDING 6" BEYOND GENSET ON ALL SIDES.

8) NO PLANTS, SHRUBS OR OTHER COMBUSTIBLES ALLOWED IN CLEARANCE AREA. (MINIMUM 4 FT. FROM EXHAUST END).

9) SENSITIVE PLANTS, PATIO FURNITURE, ETC. ARE AT LEAST 8 FEET FROM EXHAUST END OF SET.

10) REFER TO OWNERS MANUAL FOR OTHER INSTALLATION CONSTRAINTS.

11) RECOMMENDED SKID ANCHOR - 1/2" HILTI KWIK BOLT TZ CARBON STEEL WEDGE ANCHOR WITH STANDARD WASHER

48 RCLC / 60 RCLB

REV	DATE	CHANGE NUMBER	ON COMPOSITE DWGS, SEE PART NO. FOR REVISION LEVEL ☐ INDICATES PART NUMBERS AFFECTED BY LATEST DRAWING REVISION	BY
-	27JAN2021	CT209473	NEW DRAWING	RVM
A	23JUL2021	CT213532	SEE SHEET 1	RVM
B	28SEP2022	CT221726	(A-7) NOTE 8: 4FT WAS 8FT	AAS
C	02NOV2022	CT223403	(A-8) NOTE 11 ADDED; SEE SHEET 1	NCD

UNLESS OTHERWISE SPECIFIED: ALL DIMENSIONS IN MILLIMETERS
GENERAL TOLERANCES:
X.XX ± 0.25
X.X ± 1.0
X ± 1.5
ANGLES ± 0°30'
SURFACE FINISH MAX.

THIRD ANGLE PROJECTION

MAJOR ○ = 0
CRITICAL ◎ = 0
CHARACTERISTICS COMPLY WITH KPS-80022

DRAWN BY RVM DATE:
APPROVED BY TAS 27JAN2021

DO NOT SCALE.
THIS ASSEMBLY OR PART MUST COMPLY WITH PEP-RML-001.
REFERENCE CAD MODEL FOR UNSPECIFIED DIMENSIONS.

KOHLER.
KOHLER, WISCONSIN 53044

SCALE: 0.050 | SHEET SIZE: B | SHEET 2 OF 2

TITLE:
DIMENSION PRINT, 48RCLC/60RCLB

DWG NO.: ADV-9760

THIS DRAWING IN DESIGN AND DETAIL IS KOHLER CO. PROPERTY AND MUST NOT BE USED EXCEPT IN CONNECTION WITH KOHLER CO. WORK. ALL RIGHTS OF DESIGN OR INVENTION ARE RESERVED.

Figure 49 Dimension Drawing, ADV-9760, Sheet 2 of 2

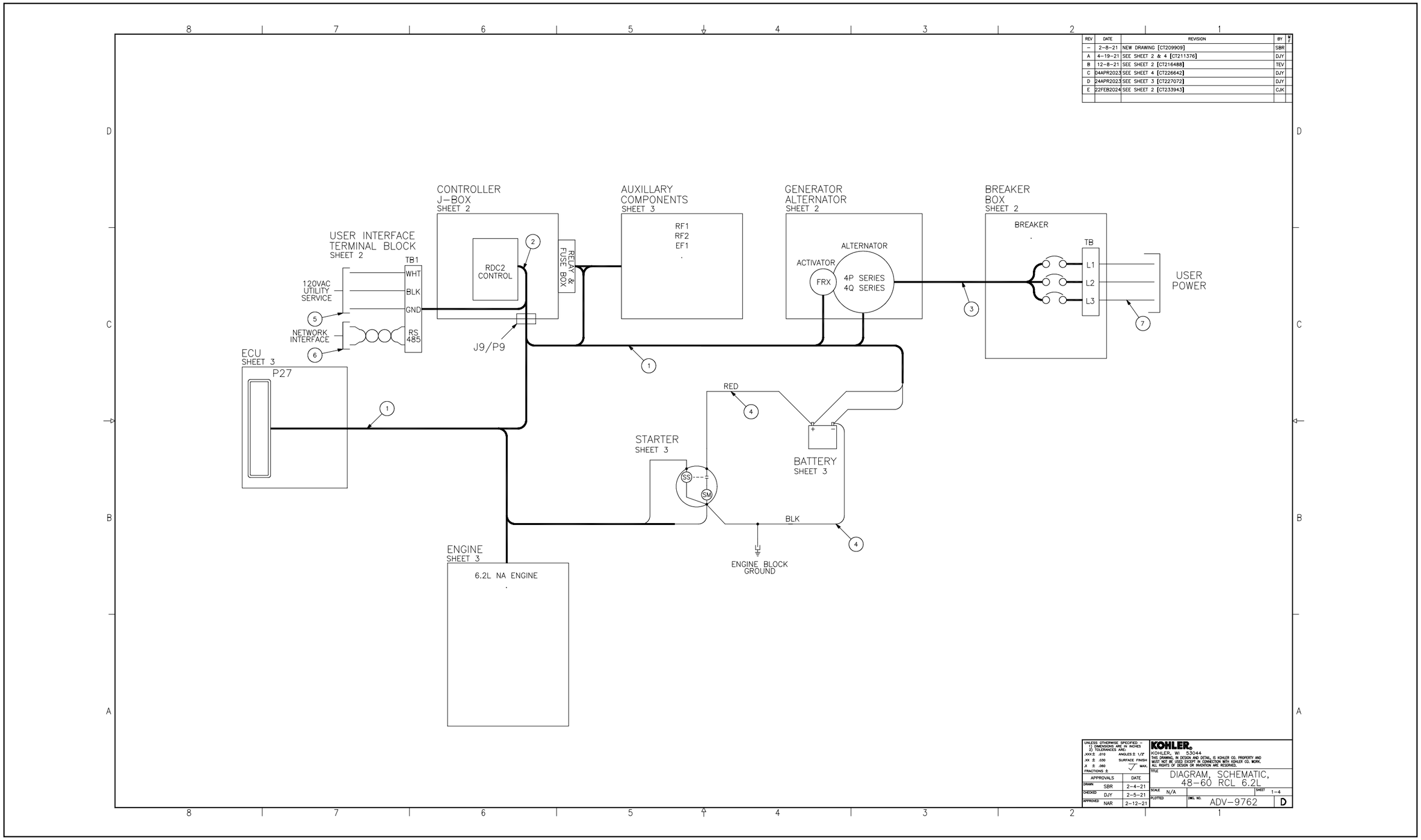

Figure 50 Schematic Diagram, ADV-9762, Sheet 1 of 4

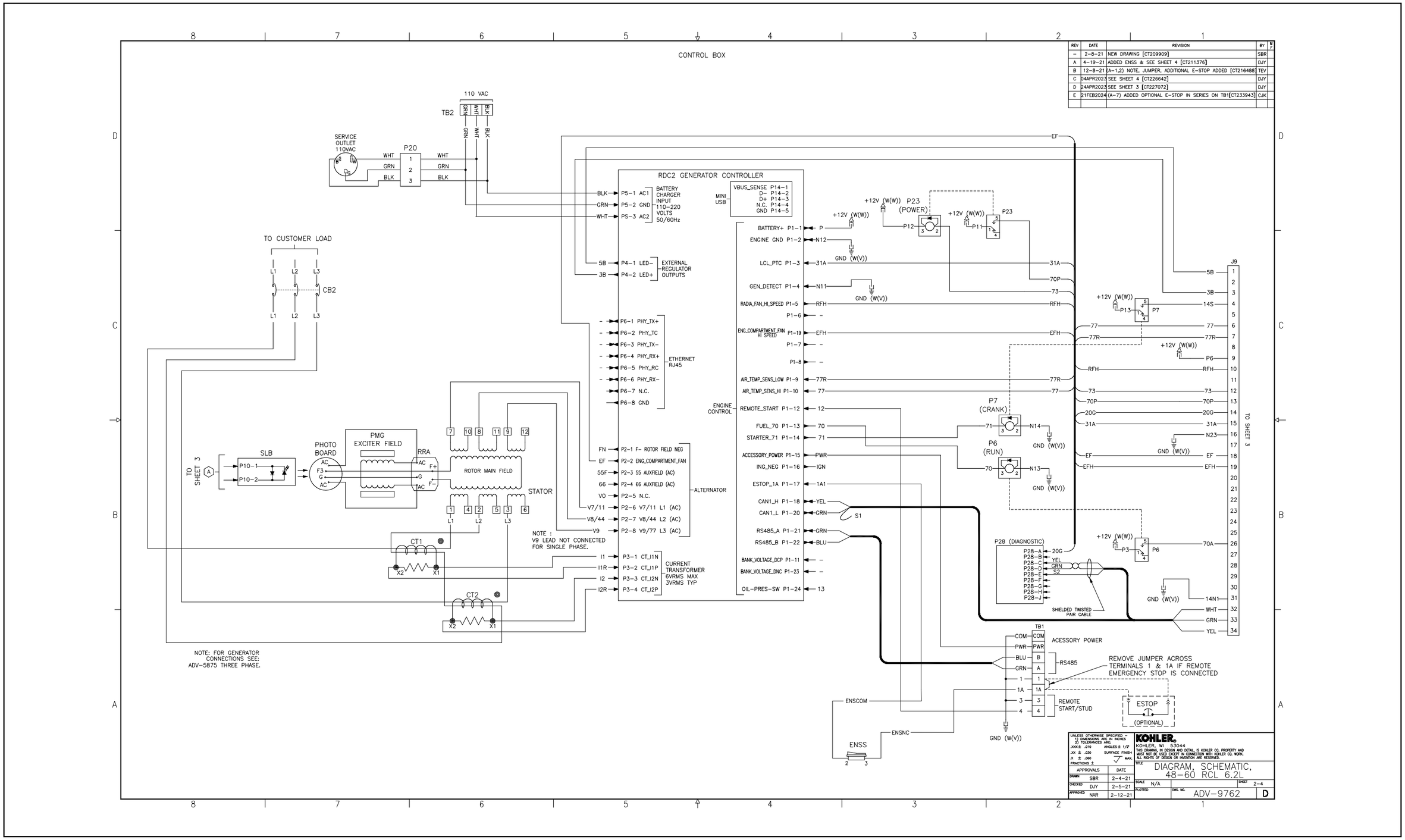

Figure 51 Schematic Diagram, ADV-9762, Sheet 2 of 4

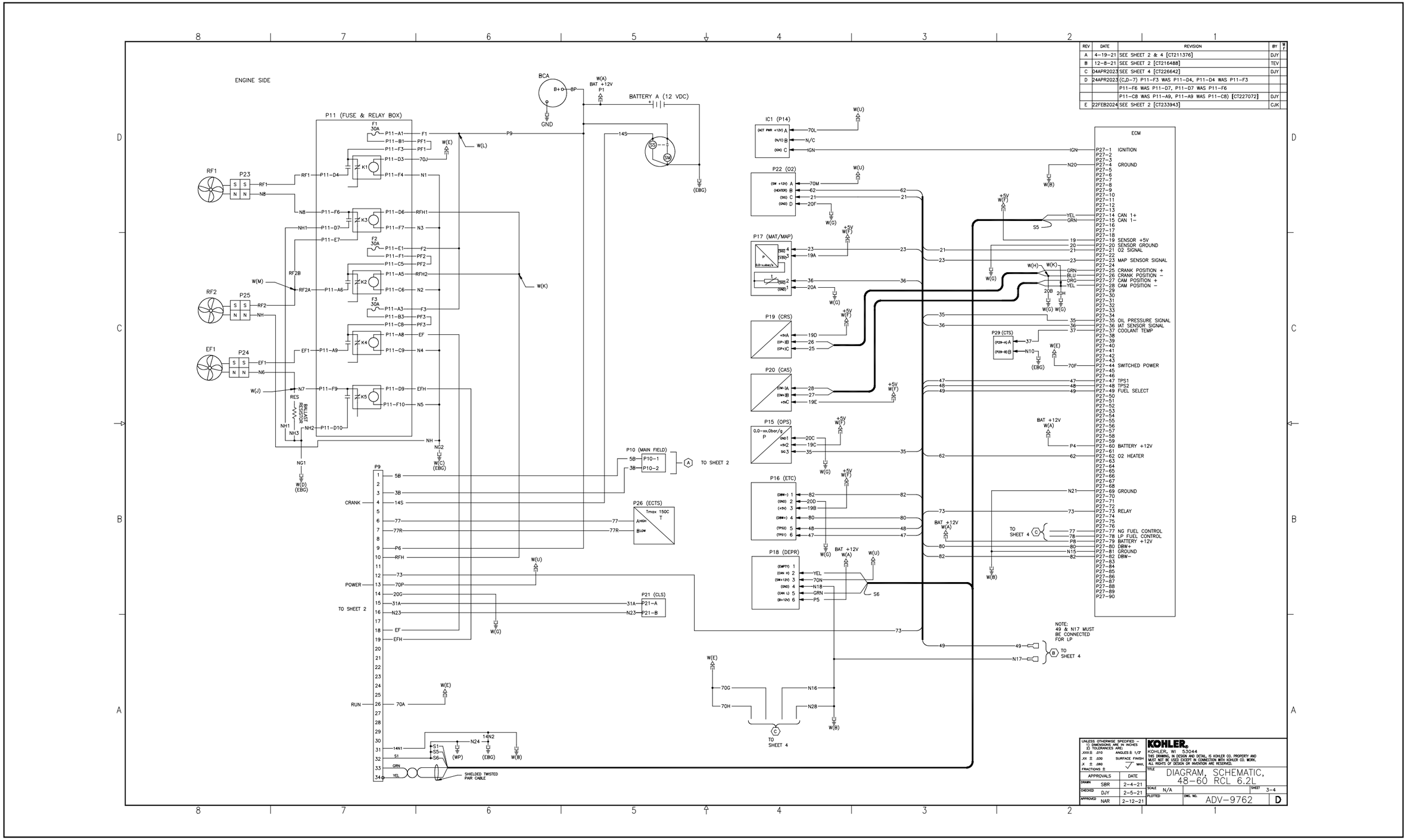

REV	DATE	REVISION	BY	M F
A	4-19-21	SEE SHEET 2 & 4 [CT211376]	DJY	
B	12-8-21	SEE SHEET 2 [CT216488]	TEV	
C	04APR2023	SEE SHEET 4 [CT226642]	DJY	
D	24APR2023	(C,D-7) P11-F3 WAS P11-D4, P11-D4 WAS P11-F3		
		P11-F6 WAS P11-D7, P11-D7 WAS P11-F6		
		P11-C8 WAS P11-A9, P11-A9 WAS P11-C8) [CT227072]	DJY	
E	22FEB2024	SEE SHEET 2 [CT233943]	CJK	

Figure 52 Schematic Diagram, ADV-9762, Sheet 3 of 4

REV	DATE	REVISION	BY	U/T
–	2–8–21	NEW DRAWING [CT209909]	SBR	
A	4–19–21	UPDATED LFP2 AND LFP3 & SEE SHEET 2 [CT211376]	DJY	
B	12–8–21	SEE SHEET 2 [CT216488]	TEV	
C	04APR2023	ADDED SINGLE FUEL OPTIONS [CT226642]	DJY	
D	24APR2023	SEE SHEET 3 [CT227072]	DJY	
E	21FEB2024	SEE SHEET 2 [CT233943]	CJK	

FUEL SYSTEMS

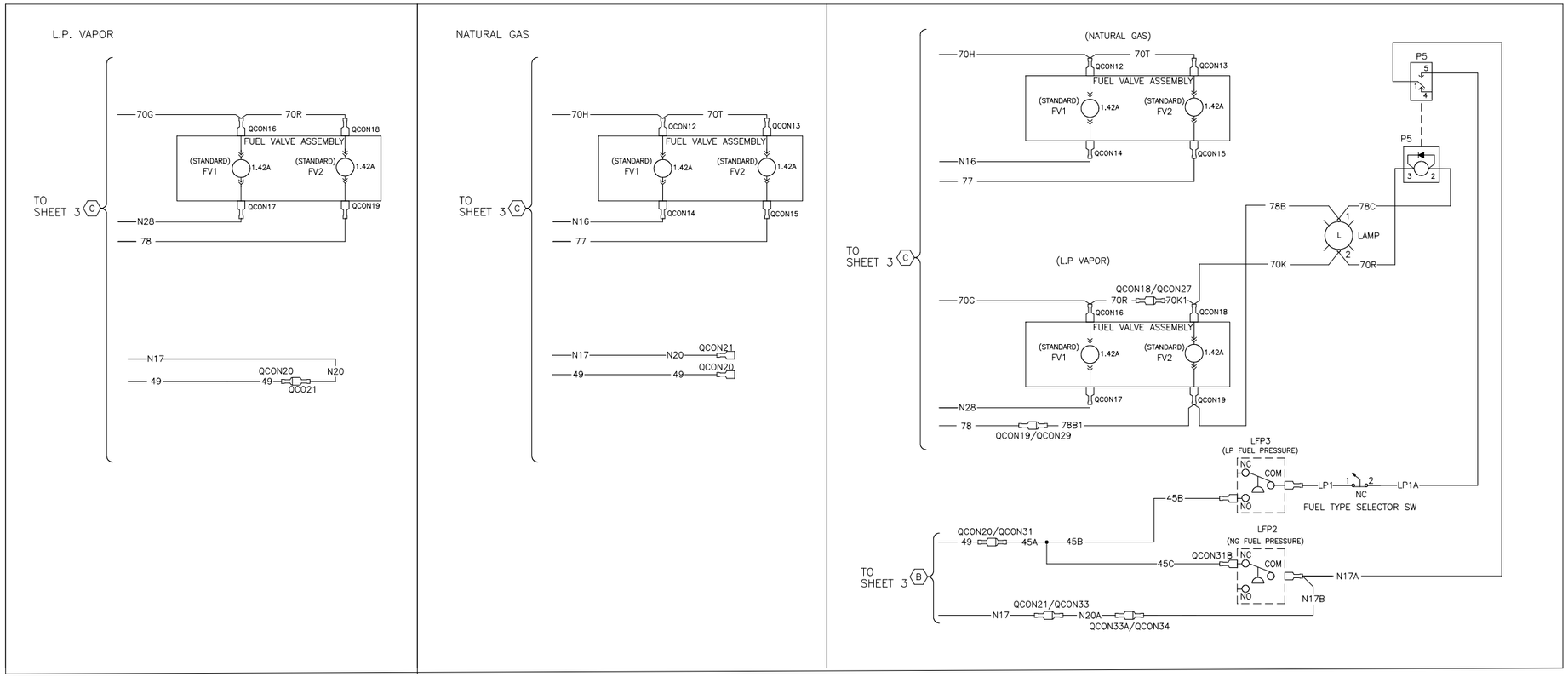

UNLESS OTHERWISE SPECIFIED –
1) DIMENSIONS ARE IN INCHES
2) TOLERANCES ARE:
.XXX ± .010 ANGLES ± 1/2°
.XX ± .030 SURFACE FINISH
.X ± .060 √ MAX.
FRACTIONS ±

APPROVALS		DATE
DRAWN	SBR	2–4–21
CHECKED	DJY	2–5–21
APPROVED	NAR	2–12–21

KOHLER.
KOHLER, WI 53044
THIS DRAWING, IN DESIGN AND DETAIL, IS KOHLER CO. PROPERTY AND MUST NOT BE USED EXCEPT IN CONNECTION WITH KOHLER CO. WORK. ALL RIGHTS OF DESIGN OR INVENTION ARE RESERVED.

TITLE DIAGRAM, SCHEMATIC, 48–60 RCL 6.2L
SCALE N/A SHEET 4–4
PLOTTED DWG. NO. ADV–9762 D

Figure 53 Schematic Diagram, ADV-9762, Sheet 4 of 4

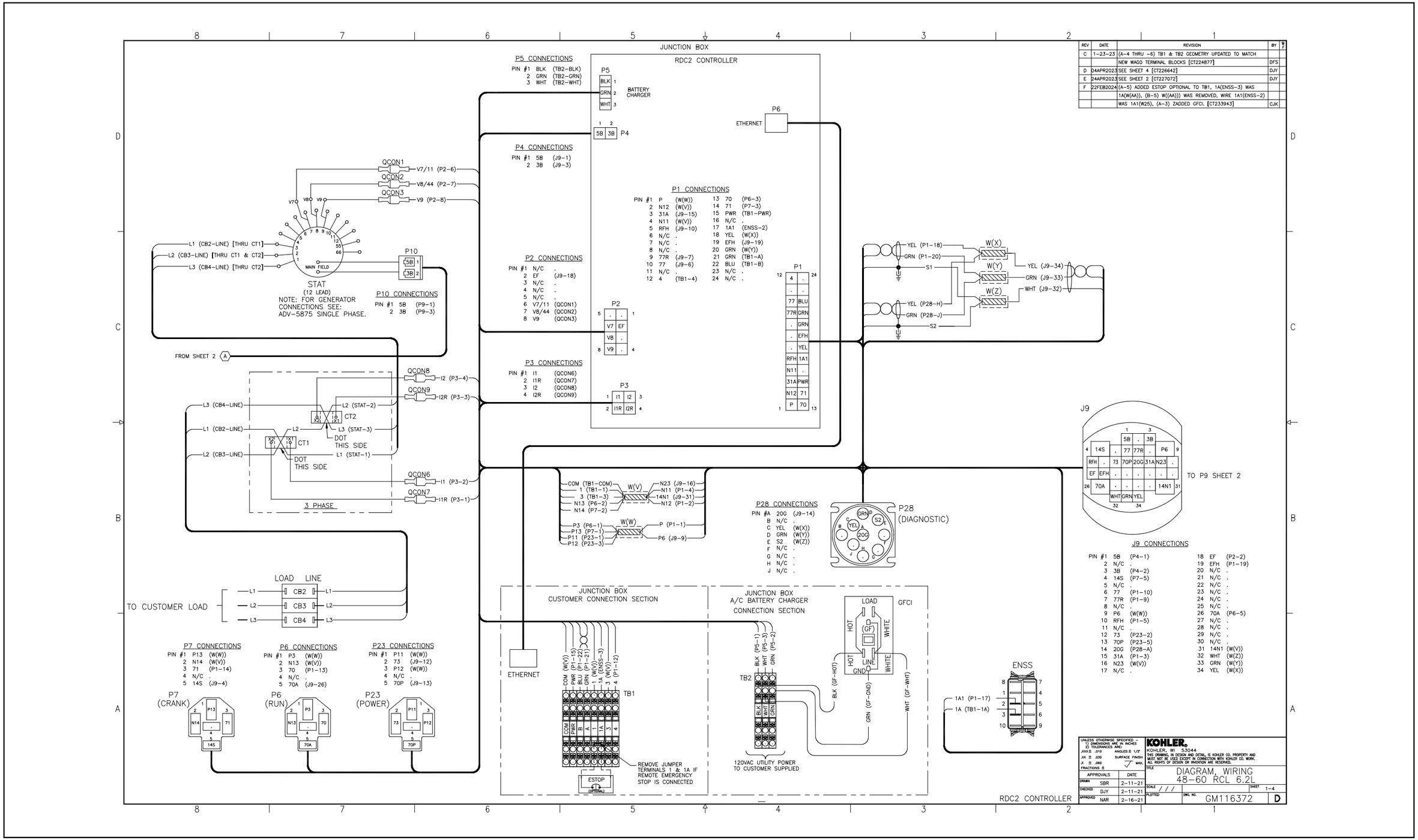

REV	DATE	REVISION	BY	U F
C	1-23-23	(A-4 THRU -6) TB1 & TB2 GEOMETRY UPDATED TO MATCH		
		NEW WAGO TERMINAL BLOCKS [CT224877]	DFS	
D	04APR2023	SEE SHEET 4 [CT226642]	DJY	
E	24APR2023	SEE SHEET 2 [CT227072]	DJY	
F	22FEB2024	(A-5) ADDED ESTOP OPTIONAL TO TB1, 1A(ENSS-3) WAS		
		1A(W(AA)), (B-5) W((AA))) WAS REMOVED, WIRE 1A1(ENSS-2)		
		WAS 1A1(W25), (A-3) ZADDED GFCI. [CT233943]	CJK	

Figure 54 Wiring Diagram, GM116372, Sheet 1 of 4

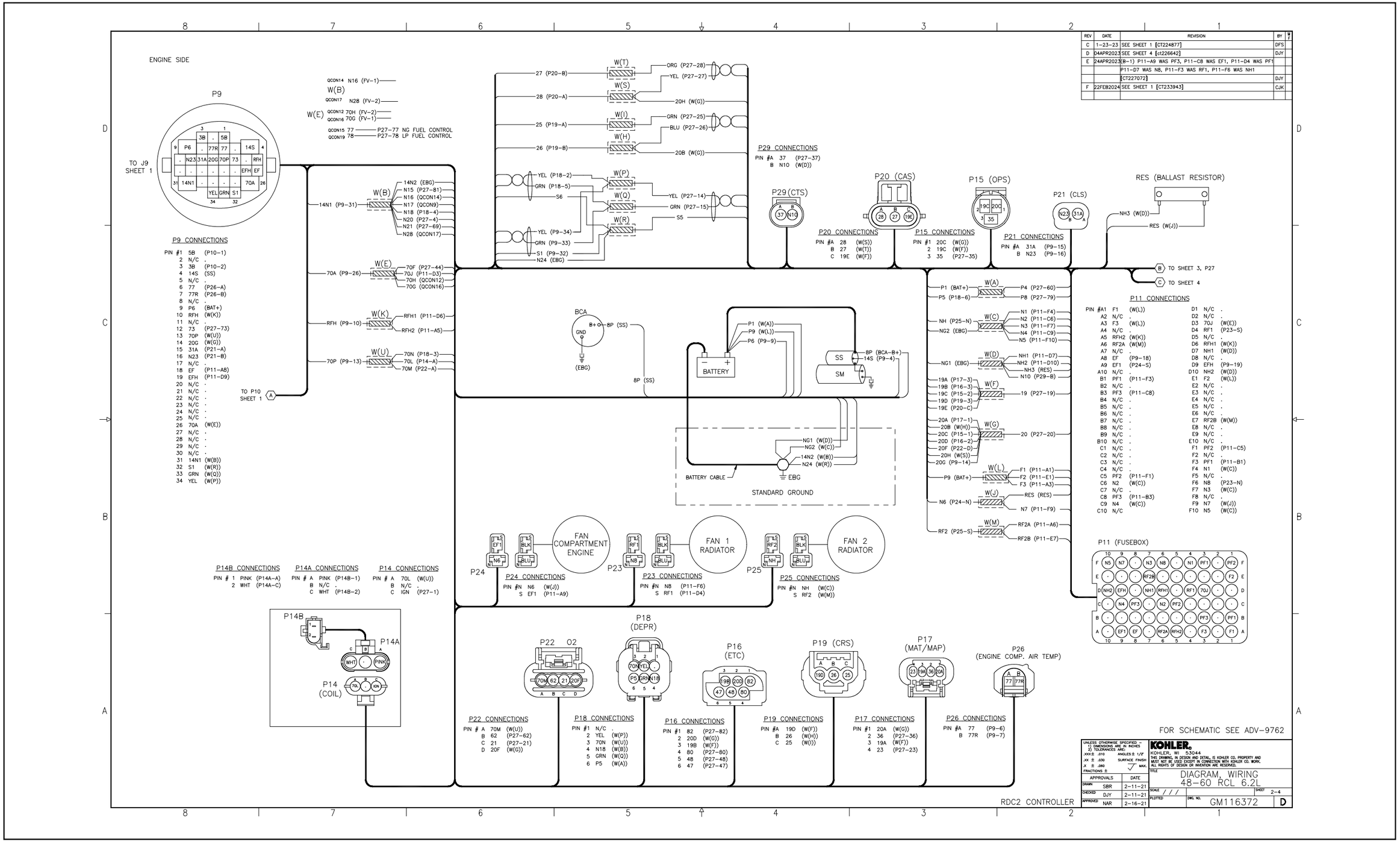

REV	DATE	REVISION	BY	M F
C	1-23-23	SEE SHEET 1 [CT224877]	DFS	
D	04APR2023	SEE SHEET 4 [ct226642]	DJY	
E	24APR2023	(8-1) P11-A9 WAS PF3, P11-C8 WAS EF1, P11-D4 WAS PF1		
		P11-D7 WAS N8, P11-F3 WAS RF1, P11-F6 WAS NH1		
		[CT227072]	DJY	
F	22FEB2024	SEE SHEET 1 [CT233943]	CJK	

Figure 55 Wiring Diagram, GM116372, Sheet 2 of 4

REV	DATE	REVISION	BY	W/E
C	1-23-23	SEE SHEET 1 [CT224877]	DFS	
D	04APR2023	SEE SHEET 4 [CT226642]	DJY	
E	24APR2023	SEE SHEET 2 [CT227072]	DJY	
F	22FEB2024	SEE SHEET 1 [CT233943]	CJK	

ENGINE ECU

P27
(ENGINE ECU)

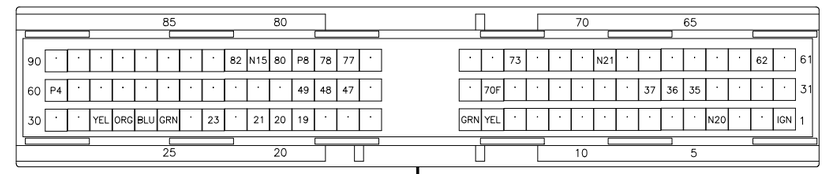

TO SHEET 2 (B)

P27 CONNECTIONS

PIN			PIN		
#1	IGN	(P14-C)	#46	N/C	.
2	N/C	.	47	47	(P16-6)
3	N/C	.	48	48	(P16-5)
4	N20	(W(B))	49	49	(QCON10)
5	N/C	.	50	N/C	.
6	N/C	.	51	N/C	.
7	N/C	.	52	N/C	.
8	N/C	.	53	N/C	.
9	N/C	.	54	N/C	.
10	N/C	.	55	N/C	.
11	N/C	.	56	N/C	.
12	N/C	.	57	N/C	.
13	N/C	.	58	N/C	.
14	YEL	(W(P))	59	N/C	.
15	GRN	(W(Q))	60	P4	(W(A))
16	N/C	.	61	N/C	.
17	N/C	.	62	62	(P22-B)
18	N/C	.	63	N/C	.
19	19	(W(F))	64	N/C	.
20	20	(W(G))	65	N/C	.
21	21	(P22-C)	66	N/C	.
22	N/C	.	67	N/C	.
23	23	(P17-4)	68	N/C	.
24	N/C	.	69	N21	(W(B))
25	GRN	(W(I))	70	N/C	.
26	BLU	(W(H))	71	N/C	.
27	ORG	(W(T))	72	N/C	.
28	YEL	(W(S))	73	73	(P9-12)
29	N/C	.	74	N/C	.
30	N/C	.	75	N/C	.
31	N/C	.	76	N/C	.
32	N/C	.	77	77	(QCON15)
33	N/C	.	78	78	(QCON1)
34	N/C	.	79	P8	(W(A))
35	35	(P15-3)	80	80	(P16-4)
36	36	(P17-2)	81	N15	(W(B))
37	37	(P29-A)	82	82	(P16-1)
38	N/C	.	83	N/C	.
39	N/C	.	84	N/C	.
40	N/C	.	85	N/C	.
41	N/C	.	86	N/C	.
42	N/C	.	87	N/C	.
43	N/C	.	88	N/C	.
44	70F	(W(E))	89	N/C	.
45	N/C	.	90	N/C	.

FOR SCHEMATIC SEE ADV-9762

RDC2 CONTROLLER

UNLESS OTHERWISE SPECIFIED –
1) DIMENSIONS ARE IN INCHES
2) TOLERANCES ARE:
.XXX ± .010 ANGLES ± 1/2°
.XX ± .030 SURFACE FINISH
.X ± .060 ✓ MAX.
FRACTIONS ±

APPROVALS		DATE
DRAWN	SBR	2-11-21
CHECKED	DJY	2-11-21
APPROVED	NAR	2-16-21

KOHLER.
KOHLER, WI 53044
THIS DRAWING, IN DESIGN AND DETAIL, IS KOHLER CO. PROPERTY AND MUST NOT BE USED EXCEPT IN CONNECTION WITH KOHLER CO. WORK. ALL RIGHTS OF DESIGN OR INVENTION ARE RESERVED.

TITLE DIAGRAM, WIRING
48-60 RCL 6.2L

SCALE / / / SHEET 3-4
PLOTTED DWG. NO. GM116372 D

Figure 56 Wiring Diagram, GM116372, Sheet 3 of 4

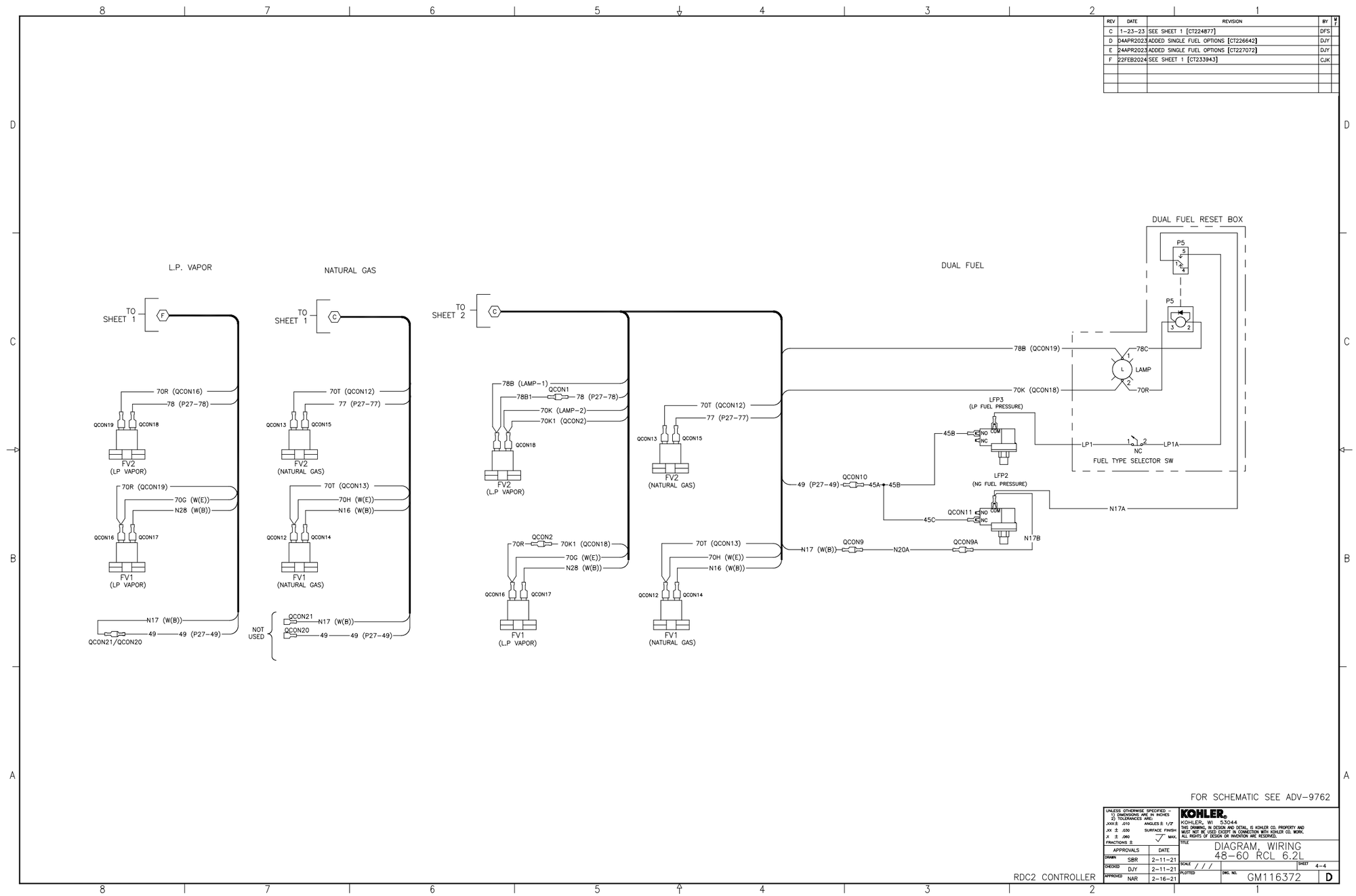

Figure 57 Wiring Diagram, GM116372, Sheet 4 of 4

A, amp	ampere	blk. htr.	block heater	DAC	digital to analog converter
ABDC	after bottom dead center	BMEP	brake mean effective pressure	dB	decibel
AC	alternating current	bps	bits per second	dB(A)	decibel (A weighted)
A/D	analog to digital	br.	Brass	DC	direct current
ADC	advanced digital control; analog to digital converter	BTDC	before top dead center	DCR	direct current resistance
adj.	adjust, adjustment	Btu	British thermal unit	DEF	diesel exhaust fluid
ADV	advertising dimensional drawing	Btu/min.	British thermal units per minute	deg., °	degree
AGM	absorbent glass mat	C	Celsius, centigrade	dept.	department
Ah	amp-hour	cal.	Calorie	dia.	Diameter
AHWT	anticipatory high water temperature	CAN	controller area network	DI/EO	dual inlet/end outlet
AISI	American Iron and Steel Institute	CARB	California Air Resources Board	DIN	Deutsches Institut fur Normung e. V. (also Deutsche Industrie Normenausschuss)
ALOP	anticipatory low oil pressure	CAT5	Category 5 (network cable)	DIP	dual inline package
alt.	alternator	CB	circuit breaker	DPDT	double-pole, double-throw
Al	aluminum	CC	crank cycle	DPST	double-pole, single-throw
ANSI	American National Standards Institute (formerly American Standards Association, ASA)	cc	cubic centimeter	DS	disconnect switch
AO	anticipatory only	CCA	cold cranking amps	DVR	digital voltage regulator
APDC	Air Pollution Control District	ccw.	Counterclockwise	E2PROM, EEPROM	electrically-erasable programmable read-only memory
API	American Petroleum Institute	CEC	Canadian Electrical Code	E, emer.	emergency (power source)
approx.	approximate, approximately	cert.	certificate, certification, certified	EATS	Exhaust Aftertreatment System
APU	Auxiliary Power Unit	cfh	cubic feet per hour	ECM	electronic control module, engine control module
AQMD	Air Quality Management District	cfm	cubic feet per minute	EDI	electronic data interchange
AR	as required, as requested	CG	center of gravity	EFR	emergency frequency relay
AS	as supplied, as stated, as suggested	CID	cubic inch displacement	e.g.	for example (exempli gratia)
ASE	American Society of Engineers	CL	centerline	EG	electronic governor
ASME	American Society of Mechanical Engineers	cm	centimeter	EGSA	Electrical Generating Systems Association
assy.	Assembly	CMOS	complementary metal oxide substrate (semiconductor)	EIA	Electronic Industries Association
ASTM	American Society for Testing Materials	com	communications (port)	EI/EO	end inlet/end outlet
ATDC	after top dead center	coml	commercial	EMI	electromagnetic interference
ATS	automatic transfer switch	Coml/Rec	Commercial/Recreational	emiss.	Emission
auto.	Automatic	conn.	Connection	eng.	Engine
aux.	auxiliary	cont.	continued	EPA	Environmental Protection Agency
avg.	average	CPVC	chlorinated polyvinyl chloride	EPS	emergency power system
AVR	automatic voltage regulator	crit.	Critical	ER	emergency relay
AWG	American Wire Gauge	CRM	Common Rail Manifold	ES	engineering special, engineered special
AWM	appliance wiring material	CSA	Canadian Standards Association		
bat.	Battery	CT	current transformer	ESD	electrostatic discharge
BBDC	before bottom dead center	Cu	copper	est.	estimated
BC	battery charger, battery charging	cUL	Canadian Underwriter's Laboratories	E-Stop	emergency stop
BCA	battery charging alternator	cu. in.	cubic inch	etc.	et cetera (and so forth)
BCI	Battery Council International	cw.	Clockwise	exh.	exhaust
BDC	before dead center	CWC	city water-cooled	ext.	external
BHP	brake horsepower	cyl.	Cylinder	F	Fahrenheit, female

blk.	black (paint color), block (engine)	D/A	digital to analog	FDS	Fluid Dosing System
FHM	flat head machine (screw)	in.	inch	Lpm	liters per minute
fl. oz.	fluid ounce	in. H_2O	inches of water	LOP	low oil pressure
flex.	flexible	in. Hg	inches of mercury	LP	liquefied petroleum
freq.	frequency	in. Lb.	inch pounds	LPG	liquefied petroleum gas
FS	full scale	Inc.	incorporated	LS	left side
ft.	foot, feet	ind.	Industrial	L_{wa}	sound power level, A weighted
ft. lb.	foot pounds (torque)	int.	internal	LWL	low water level
ft./min.	feet per minute	int./ext.	internal/external	LWT	low water temperature
ftp	file transfer protocol	I/O	input/output	m	meter, milli (1/1000)
g	gram	IP	internet protocol	M	mega (10^6 when used with SI units), male
ga.	gauge (meters, wire size)	ISO	International Organization for Standardization	m^3	cubic meter
gal.	gallon	J	joule	m^3/hr.	cubic meters per hour
gen.	generator	JIS	Japanese Industry Standard	m^3/min.	cubic meters per minute
genset	generator set	k	kilo (1000)	mA	milliampere
GFI	ground fault interrupter	K	kelvin	man.	manual
GND, ⏚	ground	kA	kiloampere	max.	maximum
gov.	governor	KB	kilobyte (2^{10} bytes)	MB	megabyte (2^{20} bytes)
gph	gallons per hour	KBus	Kohler communication protocol	MCCB	molded-case circuit breaker
gpm	gallons per minute	kg	kilogram	MCM	one thousand circular mils
gr.	grade, gross	kg/cm^2	kilograms per square centimeter	meggar	megohmmeter
GRD	equipment ground	kgm	kilogram-meter	MHz	megahertz
gr. wt.	gross weight	kg/m^3	kilograms per cubic meter	mi.	mile
H x W x D	height by width by depth	kHz	kilohertz	mil	one one-thousandth of an inch
HC	hex cap	kJ	kilojoule	min.	minimum, minute
HCHT	high cylinder head temperature	km	kilometer	misc.	miscellaneous
HD	heavy duty	kOhm, kΩ	kilo-ohm	MJ	megajoule
HET	high exhaust temp., high engine temp.	kPa	kilopascal	mJ	millijoule
hex	hexagon	kph	kilometers per hour	mm	millimeter
Hg	mercury (element)	kV	kilovolt	mOhm, mΩ	milliohm
HH	hex head	kVA	kilovolt ampere	MOhm, MΩ	megohm
HHC	hex head cap	kVAR	kilovolt ampere reactive	MOV	metal oxide varistor
HP	horsepower	kW	kilowatt	MPa	megapascal
hr.	hour	kWh	kilowatt-hour	mpg	miles per gallon
HS	heat shrink	kWm	kilowatt mechanical	mph	miles per hour
hsg.	Housing	kWth	kilowatt-thermal	MS	military standard
HVAC	heating, ventilation, and air conditioning	L	liter	ms	millisecond
HWT	high water temperature	LAN	local area network	m/sec.	meters per second
Hz	hertz (cycles per second)	L x W x H	length by width by height	mtg.	mounting
IBC	International Building Code	lb.	pound, pounds	MTU	Motoren-und Turbinen-Union
IC	integrated circuit	lbm/ft^3	pounds mass per cubic feet	MW	megawatt
ID	inside diameter, identification	LCB	line circuit breaker	mW	milliwatt
IEC	International Electrotechnical Commission	LCD	liquid crystal display	µF	microfarad
IEEE	Institute of Electrical and Electronics Engineers	LED	light emitting diode	µF	microfarad
IMS	improved motor starting	Lph	liters per hour		

N, norm.	normal (power source)	PMG	permanent magnet generator	SCR	silicon controlled rectifier (electrical), selective catalytic reduction (exhaust emissions)
NA	not available, not applicable	pot	potentiometer, potential	s, sec.	second
nat. gas	natural gas	ppm	parts per million	SI	*Systeme international d'unites*, International System of Units
NBS	National Bureau of Standards	PROM	programmable read-only memory	SI/EO	side in/end out
NC	normally closed	psi	pounds per square inch	sil.	Silencer
NEC	National Electrical Code	psig	pounds per square inch gauge	SMTP	simple mail transfer protocol
NEMA	National Electrical Manufacturers Association	pt.	pint	SN	serial number
NiCd	nickel cadmium	PTC	positive temperature coefficient	SNMP	simple network management protocol
NFPA	National Fire Protection Association	PTO	power takeoff	SPDT	single-pole, double-throw
Nm	newton meter	PVC	polyvinyl chloride	SPST	single-pole, single-throw
NO	normally open	PVC	polyvinyl chloride	spec	specification
no., nos.	number, numbers	PWM	pulse width modulated, pulse width modulation	specs	specification(s)
NPS	National Pipe, Straight	qt.	quart, quarts	sq.	square
NPSC	National Pipe, Straight-coupling	qty.	quantity	sq. cm	square centimeter
NPT	National Standard taper pipe thread per general use	R	replacement (emergency) power source	sq. in.	square inch
NPTF	National Pipe, Taper-Fine	rad.	radiator, radius	SMS	short message service
NR	not required, normal relay	RAM	random access memory	SS	stainless steel
Ns	nanosecond	RDO	relay driver output	std.	standard
OC	overcrank	ref.	reference	stl.	Steel
OD	outside diameter	rem.	Remote	tach.	Tachometer
OEM	original equipment manufacturer	Res/Coml	Residential/Commercial	TB	terminal block
OF	overfrequency	RFI	radio frequency interference	TCP	transmission control protocol
opt.	option, optional	RH	round head	TD	time delay
OS	oversize, overspeed	RHM	round head machine (screw)	TDC	top dead center
OSHA	Occupational Safety and Health Administration	rly.	Relay	TDEC	time delay engine cooldown
OSHPD	Office of Statewide Health Planning and Development (California)	rms	root mean square	TDEN	time delay emergency to normal
OV	overvoltage	rnd.	Round	TDES	time delay engine start
oz.	ounce	RO	read only	TDNE	time delay normal to emergency
p., pp.	page, pages	ROM	read only memory	TDOE	time delay off to emergency
PC	personal computer	rot.	rotate, rotating	TDON	time delay off to normal
PCB	printed circuit board	rpm	revolutions per minute	temp.	temperature
pF	picofarad	RS	right side	term.	Terminal
PF	power factor	RTDs	resistance temperature detectors	THD	total harmonic distortion
ph., ø	phase	RTU	remote terminal unit	TIF	telephone influence factor
PHC	Phillips® head Crimptiter (screw)	RTV	room temperature vulcanization	tol.	Tolerance
PHH	Phillips® hex head (screw)	RW	read/write	turbo.	Turbocharger
PHM	pan head machine (screw)	SAE	Society of Automotive Engineers	typ.	typical (same in multiple locations)
PLC	programmable logic control	scfm	standard cubic feet per minute	UF	underfrequency

UHF	ultrahigh frequency
UIF	user interface
UL	Underwriter's Laboratories, Inc.
UNC	unified coarse thread (was NC)
UNF	unified fine thread (was NF)
univ.	universal
URL	uniform resource locator (web address)
US	undersize, underspeed
UV	ultraviolet, undervoltage
V	volt
VAC	volts alternating current
VAR	voltampere reactive
VDC	volts direct current
VFD	vacuum fluorescent display
VGA	video graphics adapter
VHF	very high frequency
W	watt
WCR	withstand and closing rating
w/	with
WO	write only
w/o	without
wt.	weight
xfmr	transformer

TP-7203 6/24e

Original Instructions (English)

© 2021 Kohler Co. All rights reserved.

KOHLER CO. Kohler, Wisconsin 53044
Phone 920-457-4441, Fax 920-459-1646
For the nearest sales/service outlet in the
US and Canada, phone 1-800-544-2444
KOHLERPower.com