REV	DATE	REVISION	BY	M F
–	21AUG2025	RELEASE FOR PROTOTYPE	AVS	
A	09FEB2026	UPDATED CONTROLLER & BREAKER CONNECTIONS, ADDED SHEET 3	AVS	

LEGEND
CE – TRANSFER COIL (EMERGENCY)
CN – TRANSFER COIL (NORMAL)
K(#) – RELAY
LSN – POSITION SENSE SWITCH (NORMAL)
LSE – POSITION SENSE SWITCH (EMERGENCY)
P(#) – CONNECTOR
TB(#) – TERMINAL BLOCK

CUSTOMER NORMAL SOURCE CONNECTIONS

NORMAL SERVICE DISCONNECT 100–200A, 80% RATED SQUARE D TYPE QOM

NL1 NL2

AUX CIRCUIT 1 LINE

AUX CIRCUIT 2 LINE (OPTIONAL)

UTILITY GROUND

UTILITY NEUTRAL

GROUND–NEUTRAL BOND LOCATED ON UTILITY SIDE IN cULus UNITS (NEUTRAL BONDING JUMPER)

NEUTRAL

(1) MOV

NL2A (TS–NL2)
LSN (TS–LSN–NO)
LSN (P13–2)
CN (TS–CN–3)
NL1 (P13–5)
NL2 (P13–1)
NL2A (TS–CN–4)

CN LSN LSE CE

NL1 (NA) NL2 (NB) EL1 (EA) EL2 (EB) LL1 (LA) LL2 (LB)

(1) MOV

EL2A (TS–EL2)
LSE (TS–LSE–NO)
CE (TS–CE–7)
LSE (P13–6)
LL1 (P13–4)
EL1 (P13–7)
LL2 (P13–8)
EL2 (P13–3)
EL2A (TS–CE–8)

JUMPER BETWEEN P11–1 & P11–2 WILL DISABLE LOAD CONTROL

FACTORY INSTALLED JUMPER BETWEEN P11–2 & P11–3 WILL ENABLE COMBO BOARD LOAD CONTROL

P11 1 2 3

RXT/LCM COMBO INTERFACE BOARD

K1

TB3 NC C HVAC A NC C HVAC B

HVAC LOAD CONTROL (CUSTOMER WIRED)

P10 (R–BUS)
GRN 1 A–
BLU 2 B+
RED 3 PWR
BLK 4 COM

K2

TB1 I1 I1R

TB1 CONNECTIONS
PIN #1 I1 WHT (DETAIL A)
2 I1R BLK (DETAIL A)

K3 K4 K5 K6 K7 K8

P13

P13 CONNECTIONS
PIN #1 NL2 (TS–NL2)
2 CN (TS–LSN–C)
3 EL2 (TS–EL2)
4 LL1 (TS–LL1)
5 NL1 (TS–NL1)
6 CE (TS–LSE–C)
7 EL1 (TS–EL1)
8 LL2 (TS–LL2)

K1 (LOAD A) RELAY
K2 (LOAD B) RELAY
K3 (LOAD C) RELAY
K4 (LOAD D) RELAY

TB2 A N B N C N D N N AC1

TOTAL COMBINED LOAD RELAY OUTPUTS NO GREATER THAN 10A MAX.

120VAC IN

EXTERNAL LOAD CONTROL (WIRING BY OTHERS)

DETAIL A

CONTACTOR
EL2 EL1
WHT (I1)
BLK (I1R)
GENSET

CT (OPTIONAL)

GROUND

GRN BLU

INTERFACE GENERATOR TO ATS (CUSTOMER WIRED)

SPD FAILURE MONITORING

SURGE PROTECTOR (OPTIONAL)

E–STOP (OPTIONAL)

100/150/200A SERVICE ENTRANCE TRX ATS

UNLESS OTHERWISE SPECIFIED – 1) DIMENSIONS ARE IN INCHES 2) TOLERANCES ARE: .XXX ± .010 ANGLES ± 1/2° .XX ± .030 SURFACE FINISH .X ± .080 √ MAX. FRACTIONS ±

THIS DRAWING, IN DESIGN AND DETAIL, IS DISCOVERY ENERGY, LLC PROPERTY AND MUST NOT BE USED EXCEPT IN CONNECTION WITH DISCOVERY ENERGY, LLC WORK. ALL RIGHTS OF DESIGN OR INVENTION ARE RESERVED.

rehlko

APPROVALS	DATE
DRAWN AVS	21AUG2025
CHECKED GW	21AUG2025
APPROVED GW	21AUG2025

TITLE: DIAGRAM, WIRING, 100–200A TRX ATS

SCALE N/A SHEET 1–2

PLOTTED DWG. NO. GM125450 D

REV	DATE	REVISION	BY	M F
–	21AUG2025	RELEASE FOR PROTOTYPE	AVS	
A	09FEB2026	UPDATED CONTROLLER & BREAKER CONNECTIONS, ADDED SHEET 3	AVS	

LEGEND
CE – TRANSFER COIL (EMERGENCY)
CN – TRANSFER COIL (NORMAL)
K(#) – RELAY
LSN – POSITION SENSE SWITCH (NORMAL)
LSE – POSITION SENSE SWITCH (EMERGENCY)
P(#) – CONNECTOR
TB(#) – TERMINAL BLOCK

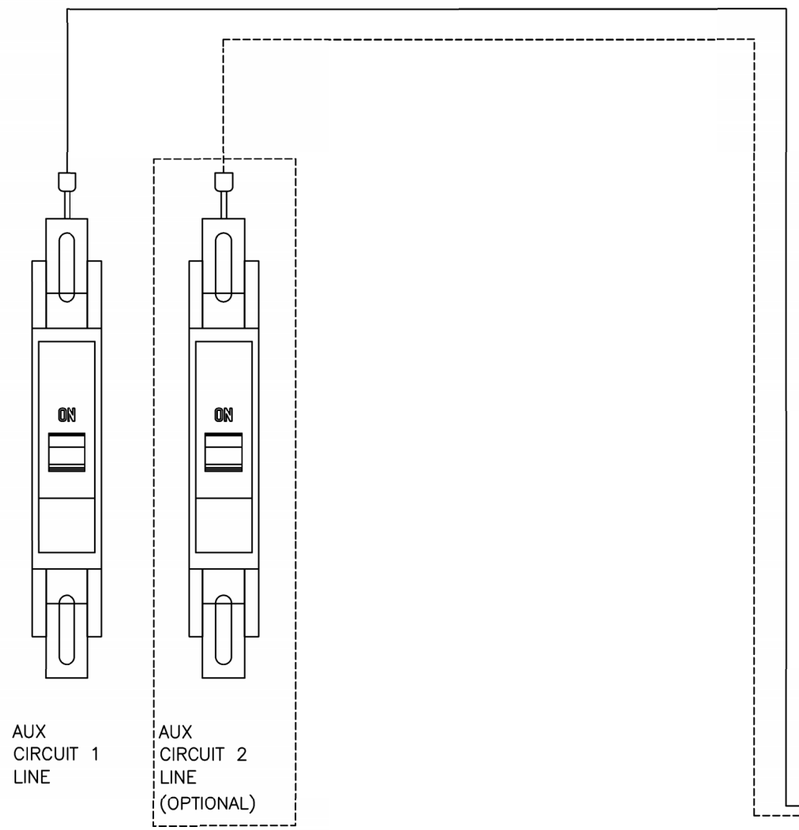

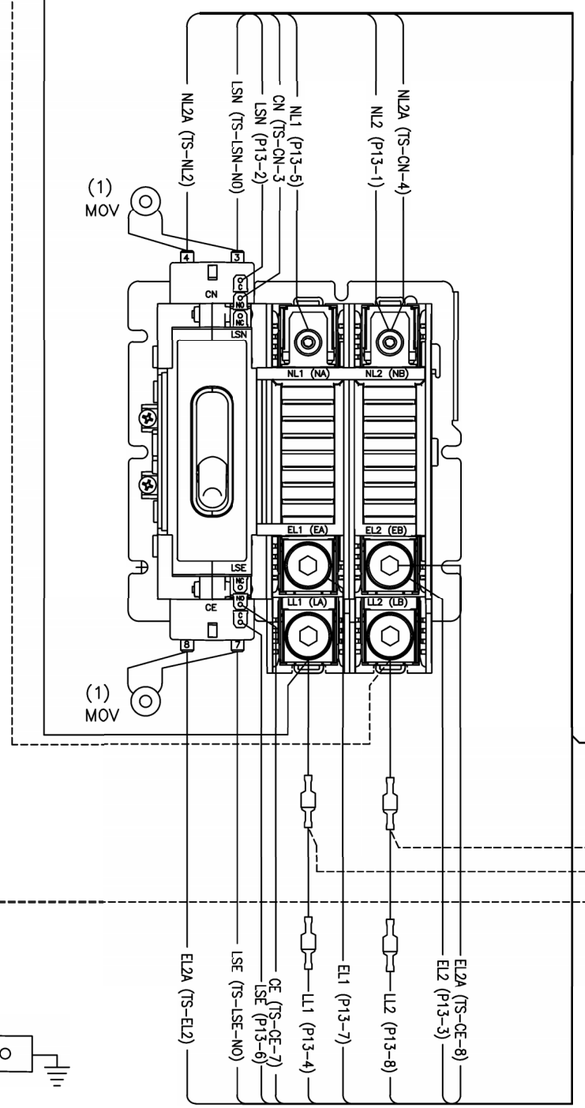

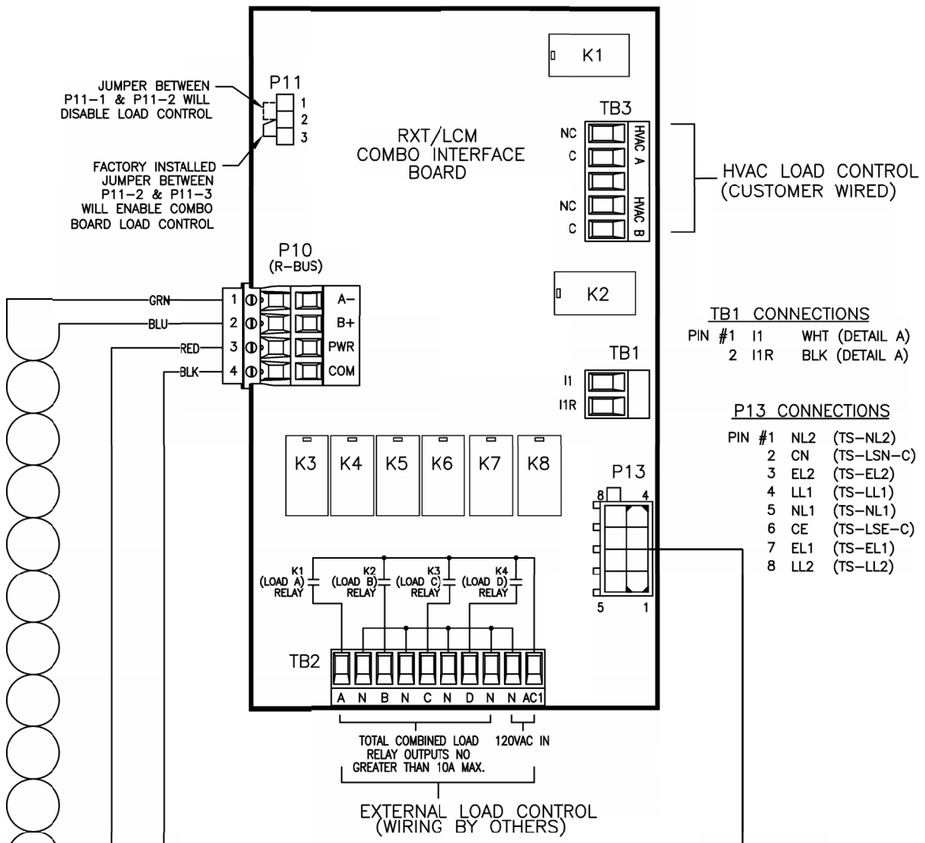

TB1 CONNECTIONS
PIN #1 I1 WHT (DETAIL A)
2 I1R BLK (DETAIL A)

P13 CONNECTIONS
PIN #1 NL2 (TS–NL2)
2 CN (TS–LSN–C)
3 EL2 (TS–EL2)
4 LL1 (TS–LL1)
5 NL1 (TS–NL1)
6 CE (TS–LSE–C)
7 EL1 (TS–EL1)
8 LL2 (TS–LL2)

NEUTRAL

DETAIL A

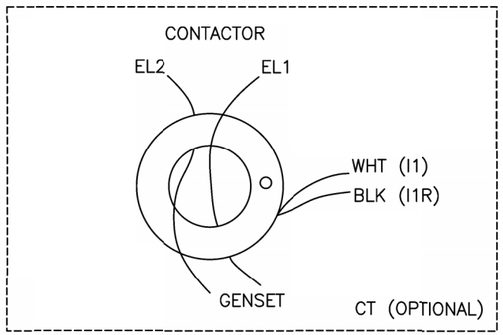

GROUND

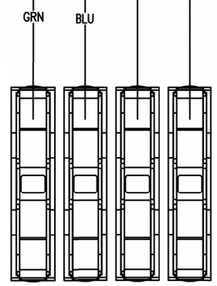

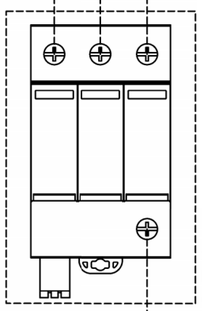

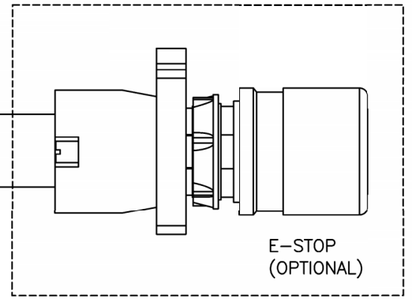

SURGE PROTECTOR (OPTIONAL)

100/150/200A STANDARD TRX ATS

UNLESS OTHERWISE SPECIFIED –
1) DIMENSIONS ARE IN INCHES
2) TOLERANCES ARE:
.XXX ± .010 ANGLES ± 1/2°
.XX ± .030 SURFACE FINISH
.X ± .080 √ MAX.
FRACTIONS ±

APPROVALS	DATE
DRAWN AVS	21AUG2025
CHECKED GW	21AUG2025
APPROVED GW	21AUG2025

THIS DRAWING, IN DESIGN AND DETAIL, IS DISCOVERY ENERGY, LLC PROPERTY AND MUST NOT BE USED EXCEPT IN CONNECTION WITH DISCOVERY ENERGY, LLC WORK. ALL RIGHTS OF DESIGN OR INVENTION ARE RESERVED.

rehlko

TITLE: DIAGRAM, WIRING, 100–200A TRX ATS

SCALE N/A | SHEET 2–2

PLOTTED | DWG. NO. GM125450 | D

LEGEND

CE – TRANSFER COIL (EMERGENCY)
CN – TRANSFER COIL (NORMAL)
K(#) – RELAY
LSN – POSITION SENSE SWITCH (NORMAL)
LSE – POSITION SENSE SWITCH (EMERGENCY)
P(#) – CONNECTOR
TB(#) – TERMINAL BLOCK

REV	DATE	REVISION	BY	M F
–	21AUG2025	RELEASE FOR PROTOTYPE	AVS	
A	09FEB2026	UPDATED CONTROLLER & BREAKER CONNECTIONS (SEE SHEET 1.2)	AVS	

ALTERNATE CONTACTOR VIEW

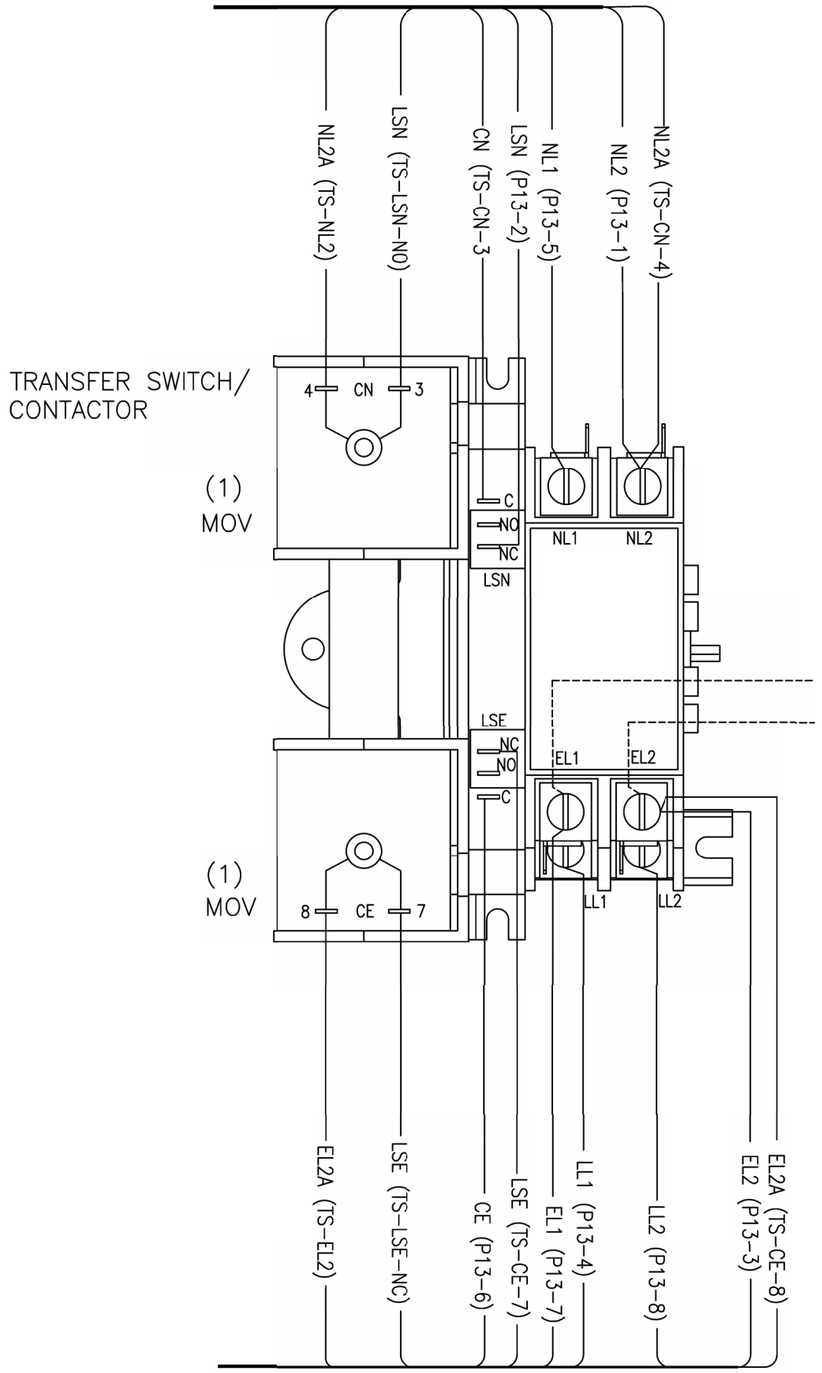

UNLESS OTHERWISE SPECIFIED –
1) DIMENSIONS ARE IN INCHES
2) TOLERANCES ARE:
.XXX ± .010 ANGLES ± 1/2°
.XX ± .030 SURFACE FINISH
.X ± .080 √ MAX.
FRACTIONS ±

APPROVALS	DATE
DRAWN AVS	21AUG2025
CHECKED GW	21AUG2025
APPROVED GW	21AUG2025

THIS DRAWING, IN DESIGN AND DETAIL, IS DISCOVERY ENERGY, LLC PROPERTY AND MUST NOT BE USED EXCEPT IN CONNECTION WITH DISCOVERY ENERGY, LLC WORK. ALL RIGHTS OF DESIGN OR INVENTION ARE RESERVED.

rehlko

TITLE: DIAGRAM, WIRING, 100–200A TRX ATS

SCALE N/A | SHEET 2–2

PLOTTED | DWG. NO. GM125450 | D