Marine Generator Set - 32EKOZD 60 Hz 28EFKOZD 50 Hz

3-Phase **Diesel**

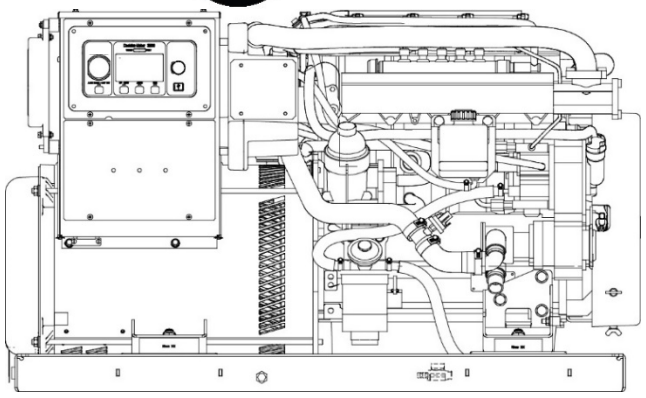

Generator Weights and Dimensions

	Without Sound Shield	With Sound Shield
Weight, kg (lb.)		
Wet	531 (1170)	607 (1339)
Dry	514 (1134)	591 (1303)
Length, mm (in.)	1222 (48.13)	1303 (51.30)
Width, mm (in.)	643 (25.33)	661 (26.04)
Height, mm (in.)	733 (28.86)	778 (30.64)

Engine Features

- Diesel fueled
- Approved for use with certified renewable Hydrotreated Vegetable Oil (HVO) / Renewable Diesel (RD) fuels compliant with EN15940 / ASTM D975.
- Certified by the Environmental Protection Agency (EPA) to conform to Tier III marine auxiliary standards (60 Hz model only)
- Four cylinder
- Four cycle
- Closed cooling system
- Heat exchanger
- Electric fuel lift pump
- Single lifting eye

Generator Features

- Class H insulation
- Multivoltage adjustability
- Voltage regulation of ±1.0%
- Radio suppression

Decision-Maker® 3500 Paralleling Controller

- A graphical display and pushbutton/rotary selector dial provide easy, local data access
- Measurements are selectable in metric or English units
- The controller supports Modbus® protocol with serial bus (RS-485) or Ethernet networks
  Modbus® is a registered trademark of Schneider Electric.
- Scrolling display shows critical data at a glance
- Graphical display of power metering (kW, kVA, V, I, PF, and VAR)
- Integrated hybrid voltage regulator
- Built-in alternator thermal overload protection

Optional Accessories

- Aluminum sound shield
- Remote digital gauge
- Remote digital display
- Siphon break
- Circuit breakers

Optional Agency Type Approval

- Lloyd's Register
  Agency requirements:
  - Extra senders, exhaust blankets, and double wall fuel lines with leak alarm
  - 3 separate Type Approval documents for engine, alternator, and Decision-Maker® 3500 controller

© 2026 Discovery Energy, LLC - All rights reserved.

Generator Ratings

Alternator	Voltage	Ph	Hz	140° C Rise Continuous Rating kW/kVA	140° C Rise Continuous Rating Amps	115° C Rise Continuous Rating kW/kVA	115° C Rise Continuous Rating Amps	115° C Rise Prime Rating kW/kVA	115° C Rise Prime Rating Amps
32EKOZD (4D8.3)	120/208	3	60	32/40	112	32/40	112	29/36	101
	120/240	3	60	32/40	97	32/40	97	29/36	88
	120/240	1	60	31/31	130	29/29	121	28/28	117
	127/220	3	60	32/40	105	32/40	105	29/36	96
	139/240	3	60	32/40	97	32/40	97	29/36	88
	277/480	3	60	32/40	49	32/40	49	29/36	44
28EFKOZD (4D8.3)	110/190	3	50	28/35	107	28/35	107	25/31	95
	110/220	3	50	28/35	92	28/35	92	25/31	83
	115/230	1	50	27/27	118	26/26	114	24/24	107
	120/208	3	50	28/35	98	27/34	95	25/31	87
	230/400	3	50	28/35	51	28/35	51	25/31	46
	240/416	3	50	28/35	49	27/34	48	25/31	44
	220/380	3	50	28/35	54	28/35	54	25/31	48

RATINGS: Marine continuous ratings per ISO 3046, ISO 8528-1, and Rehlko technical information bulletin TIB-117. Obtain technical information bulletin (TIB-101) on ratings guidelines for complete ratings definitions. Availability is subject to change without notice. Discovery Energy, LLC reserves the right to change the design or specifications without notice and without any obligation or liability whatsoever. Contact your local authorized generator distributor for availability.

© 2026 Discovery Energy, LLC - All rights reserved.

Application Data

Engine

Engine Specifications	60 Hz	50 Hz
Type	4-cycle, turbocharged	
Cylinder, quantity	4	
Displacement, L (cu. in.)	2.48 (151.5)	
Bore and stroke, mm (in.)	88 x 102 (3.46 x 4.02)	
Compression ratio	17:1	
Combustion system	Direct injection	
Rated rpm	1800	1500
Maximum power at rated rpm, HP	52.4	46.9
Governor, type	Electronic	
Frequency regulation,		
No load to full load……	Isochronous	
Steady state……	±0.5%	
Angular operation		
Intermittent (1min.)…….	35º	
Continuous……..	25º	

Engine Electrical

Engine Electrical System	60 Hz	50 Hz
Battery, voltage	12 or 24 volt	
Battery charging alternator	72 amp @ 12 volts 40 amp @ 24 volts	
Battery, minimum recommendation*	1000 CCA	
Starter motor	2 kW, 12V 2.5 kW, 24 V	

* The battery charging system is designed for standard lead acid batteries. If AGM batteries are to be used, the battery charging alternator on the engine should be disconnected and an alternative means of charging should be sourced to avoid potential damage to the equipment.

Cooling

Cooling System	60 Hz	50 Hz
Capacity, L (qt.), approx.	7 (7.4)	
Heat exchanger type	2.5 in. dia. x 2 pass	
Seawater pump type	Gear-driven, 8-blade impeller	
Heat rejected to cooling water at rated kW, wet exhaust, kW (Btu/min.)	44.9 (2553)	36.8 (2093)
Engine water pump flow, Lpm (gpm)	70 (18.5)	57 (15)
Seawater pump flow, Lpm (gpm)	89 (23.5)	78 (20.6)
Seawater Temperature Limit ºC (ºF)	38 (100)	

Fuel

Fuel System	60 Hz	50 Hz
Fuel shutoff solenoid	Electric	
Fuel pump	Electric	
Fuel injection system	High Pressure Common Rail (HPCR)	
Maximum recommended fuel lift, m (ft.)	1.2 (4.0)	

Lubrication

Lubricating System	60 Hz	50 Hz
Oil pan capacity with filter, L (qt.)	10.5 (11.0)	
Oil pump type	Pressure, trochoid pump	

Operation Requirements

Air Requirements	60 Hz	50 Hz
Engine combustion air requirements, L/min. (cfm)	2618 (92)	2147 (76)
Generator cooling requirements, L/min. (cfm)	10760 (380)	9345 (330)
Max. air intake restriction, kPa (in. H_2O)	4.5 (18)	3.5 (14)
Exhaust flow, m^3/min. (cfm)	5.7 (202)	4.9 (172)
Exhaust temp., ºC (ºF) at full load	455 (851)	450 (842)
Max. allowed exhaust back pressure, kPa (in. H_2O)	11 (44.2)	9.0 (36.1)

Fuel Consumption	60 Hz	50 Hz
Diesel, Lph (gph) at % load		
100%	11.3 (2.99)	9.7 (2.57)
75%	8.5 (2.24)	7.3 (1.93)
50%	5.7 (1.51)	4.9 (1.30)
25%	3.2 (0.85)	2.7 (0.72)

Note:
The fuel consumption of the 60 Hz model is based on 32EKOZD and the fuel consumption of the 50 Hz model is based on 28EFKOZD.

Engine Features

- Low oil pressure shutdown
- High engine temperature shutdown
- Low seawater pressure shutdown
- Vibromount
- Belt guard
- Disposable oil filter
- Oil drain valve
- Disposable fuel filter

Alternator Features

- Brushless, rotating field design permits power to be obtained from stationary leads.
- Windings are vacuum impregnated with epoxy varnish for dependability and long life.
- Rotors are dynamically balanced to minimize vibration.
- Copper windings ensure minimal heat buildup. Insulation meets NEMA standards for class H insulation.
- Direct connected to the engine, the generator has sealed precision ball bearings with a precision-machined steel sleeve in the end bracket to prevent shaft misalignment and extend bearing life.
- Mounted on a drip-proof tray.
- Equipped with a twelve-lead reconnectable stator.
- Capable of sustained line-to-neutral short circuit current of up to 300% of the rated current for up to 2 seconds. (IEC 60092-301 short-circuit performance.)

© 2026 Discovery Energy, LLC - All rights reserved.

Application Data



Decision-Maker® 3500 Controller

Provides advanced control, system monitoring, and system diagnostics for optimum performance and compatibility. The Decision-Maker® 3500 controller uses a patented hybrid voltage regulator and unique software logic to manage alternator thermal overload protection features normally requiring additional hardware. Additional features include:

- **AC Output Voltage Regulator Adjustment.** The voltage adjustment provides a maximum adjustment of ±10% of the system voltage.
- **Alarm Silence.** The controller can be set up to silence the alarm horn only when in the AUTO mode for NFPA-110 application or Always for user convenience.
- **Alternator Protection.** The controller provides generator set overload and short circuit protection matched to each alternator for the particular voltage/phase configuration.
- **Automatic Restart.** The controller automatic restart feature initiates the start routine and recrank after a failed start attempt.
- **Cyclic Cranking.** The controller has programmable cyclic cranking.
- **ECM Diagnostics.** The controller displays engine ECM fault code descriptions to help in engine troubleshooting.
- **Engine Start Aid.** The configurable starting aid feature provides customized control for an optional engine starting aid.
- **Event Logging.** The controller keeps a record (up to 1000 entries) for warning and shutdown faults. This fault information becomes a stored record of system events and can be reset.
- **Historical Data Logging.** Total number of successful starts of the generator is recorded and displayed.
- **Integrated Hybrid Voltage Regulator.** The voltage regulator provides ±0.5% no-load to full-load RMS voltage regulation with three-phase sensing.
- **Lamp Test.** Press the alarm silence/lamp test button to verify functionality of the indicator lights.
- **LCD Display.** Adjustable contrast for improving visibility.
- **Measurement Units.** The controller provides selection of English or metric displays.
- **Power Metering.** Controller graphical display provides voltage, current, power factor, kW, kVA, and kVAR.
- **Programming Access (USB).** Provides software upgrades and diagnostics with PC software tools.
- **Remote Reset.** The remote reset function supports acknowledging and resetting faults and allows restarting of the generator set without going to the master control switch off/reset position.
- **Run Time Hourmeter.** The generator set run time is displayed.
- **Time Delay Engine Cooldown (TDEC).** The TDEC provides a time delay before the generator set shuts down.
- **Time Delay Engine Start (TDES).** The TDES provides a time delay before the generator set starts.
- **Voltage Selection Menu.** This menu provides the capability to switch the generator output voltage. NOTE: Generator set output leads may require reconnection.
- **Paralleling Functions:**
  - Bus sensing
  - First on logic
  - Synchronizing
  - Communication based isochronous load sharing
  - Droop load sharing
  - External controlled load sharing via analog bias signals

Accessories

Sound Shield

Provides for highly effective silencing, ease of access for engine/generator servicing, low maintenance, excellent durability, and safety. The sound shield's customer connection panel includes connections for the following:

- Battery (positive and negative)
- Equipment ground
- Fuel inlet and return
- Seawater inlet
- Water-cooled exhaust outlet
- Oil drain
- Customer load lead access

Siphon Break

Mandatory kit on generators installed below the waterline. Prevents the siphoning of flotation water into the engine.

Line Circuit Breakers

Protect the generator from extreme overload.

Ship-to-Shore Switch

Allows immediate switching to Rehlko generator set power or shore power protecting the electrical system from the possibility of simultaneous connection of both power sources.

Remote Digital Gauge

Allows starting and stopping from a location remote from the generator set.

- 3 in. gauge for J1939
  Requires a 76.2 mm (3 in.) dia. hole for mounting.

Remote Digital Display

Allows starting, stopping, and monitoring from a location remote from the generator set.

Remote Connection/Extension Harness

Provides wiring for the remote digital gauge.

© 2026 Discovery Energy, LLC - All rights reserved.

MODEL	WEIGHT		C.O.B. (DIM "X")
	WET -KG [LBS]	DRY - KG [LBS]	MM [IN.]
28EFKOZD/32EKOZD	531 [1170]	514 [1134]	591 [23.25]
35EFKOZD/40EKOZD	567 [1250]	551 [1214]	629 [24.75]

NOTE: C.O.B. DIMENSION IS TAKEN FROM REAR OF DRIP TRAY.

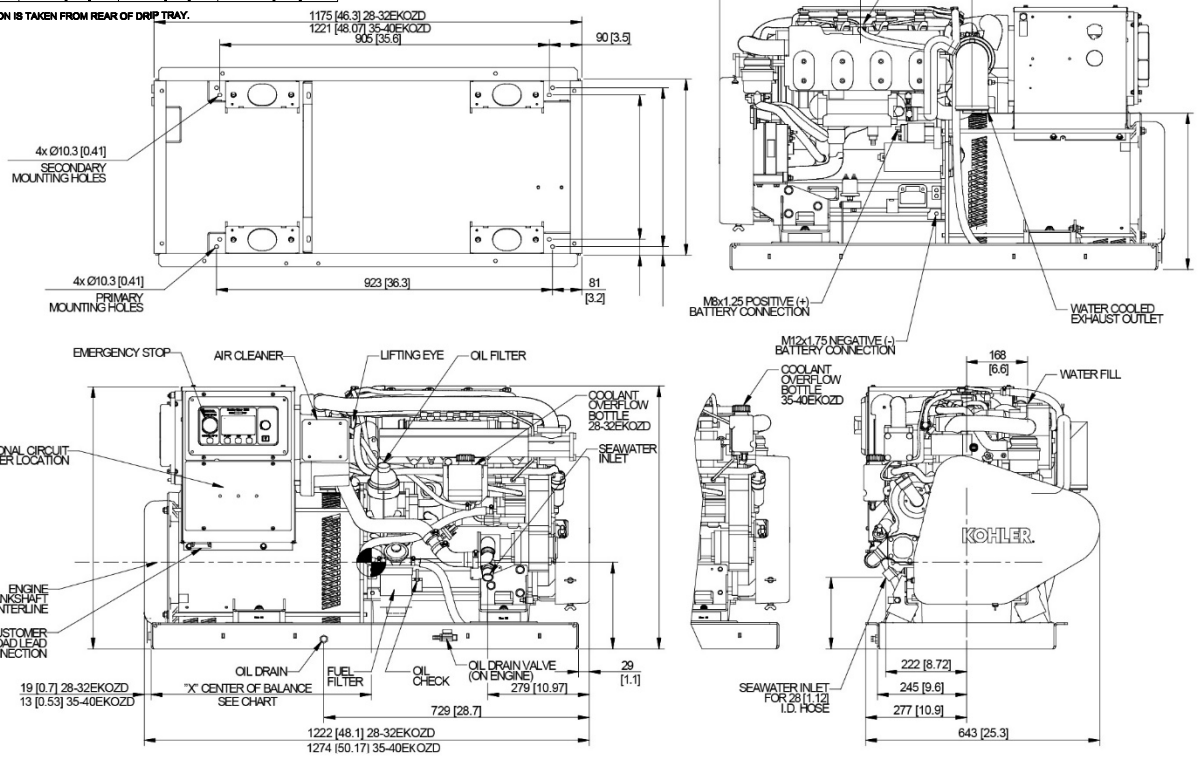

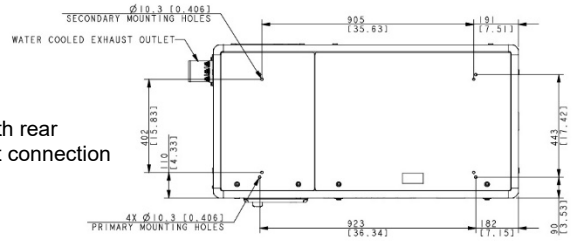

Note:
Sound shield shown with rear connection panel. Front connection panel is also available.

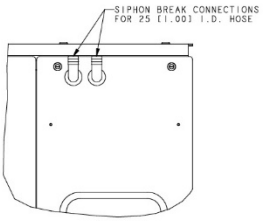

OPTIONAL SIPHON BREAK CONNECTION KIT
SCALE 0.250

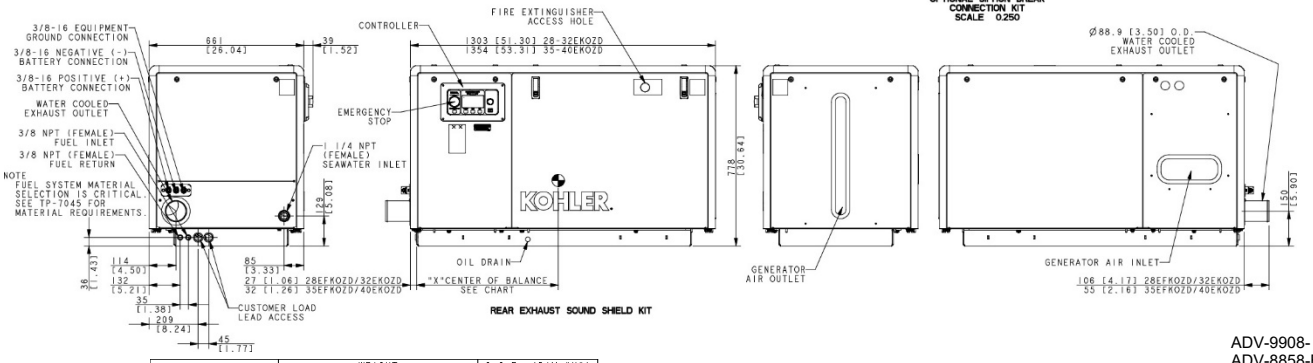

REAR EXHAUST SOUND SHIELD KIT

ADV-9908-
ADV-8858-B-

MODEL	WEIGHT		C.O.B. (DIM "X")
	WET -KG [LBS]	DRY - KG [LBS]	MM [IN.]
28EFKOZD/32EKOZD	607 [1339]	591 [1303]	584 [23.00]
35EFKOZD/40EKOZD	637 [1404]	620 [1367]	624 [24.56]

NOTE
C.O.B. DIMENSION IS TAKEN FROM REAR OF DRIP TRAY.

Note:
Dimensions are shown in mm [in.].

Note:
This drawing is provided for reference only and is not intended for installation planning. Contact your local authorized distributor for more detailed information.

© 2026 Discovery Energy, LLC - All rights reserved.

© 2026 Discovery Energy, LLC - All rights reserved.