Marine Generator Set - 9EKOZD 60 Hz 7EFKOZD 50 Hz

1-Phase **Diesel**

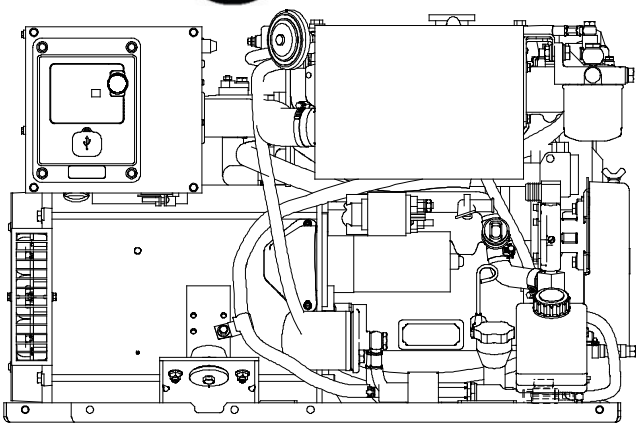

Generator Weights and Dimensions

	Without Sound Shield	With Sound Shield
Weight, kg (lb.)		
Wet	211 (465)	249 (548)
Dry	207 (456)	245 (539)
Length, mm (in.)	827 (32.58)	865 (34.06)
Width, mm (in.)	449 (17.68)	528 (20.79)
Height, mm (in.)	536 (21.12)	559 (22.01)

Generator Ratings

Model Generator (Alternator)	Voltage	Hz	25°C (77°F) Amps	25°C (77°F) kW/kVA	Ph
9EKOZD (4H4)	120	60	70.8	8.5/8.5	1
	120/240	60	35.4	8.5/8.5	1
7EFKOZD (4H4)	115/230	50	30.4	7/7	1
	230	50	30.4	7/7	1
	240	50	29.2	7/7	1

Engine Features

- Diesel fueled
- Approved for use with certified renewable Hydrotreated Vegetable Oil (HVO) / Renewable Diesel (RD) fuels compliant with EN15940 / ASTM D975.
- Certified by the Environmental Protection Agency (EPA) to conform to Tier III marine auxiliary standards (60 Hz model only)
- Three cylinder
- Four cycle
- Closed cooling system
- Heat exchanger
- Electric fuel lift pump
- Lifting eye

Generator Features

- Remote start 12-pin connector
- Class H insulation
- Multivoltage adjustability
- Voltage regulation of ±1.0%
- Radio suppression

ADC IId Advanced Digital Control Features

- Designed for today's most sophisticated electronics
- Easy to read 12 x 2 LCD alpha-numeric display
- Compact, integrally mounted control
- Sealed connectors for maximum corrosion protection
- SAE J1939, SmartCraft™, NMEA 2000 selectable CANbus outputs
- Remote monitoring of fault conditions
- Pushbutton dial for configuration and adjustment
- Programmed crank cycle

Optional Accessories

- Aluminum sound shield
- Remote digital gauge (2 or 3 inch)
- Siphon break
- Ignition protected starter
- Circuit breakers

RATINGS: Marine continuous ratings per ISO 3046, ISO 8528-1, and Rehlko ISO rating guideline 2.14. Obtain technical information bulletin (TIB-101) on ratings guidelines for complete ratings definitions. Availability is subject to change without notice. Discovery Energy, LLC reserves the right to change the design or specifications without notice and without any obligation or liability whatsoever. Contact your local authorized generator set distributor for availability.

SmartCraft™ is a trademark of Mercury Marine, a division of Brunswick Corporation.

© 2026 Discovery Energy, LLC - All rights reserved.

Application Data

Engine

Engine Specifications	60 Hz	50 Hz
Type	4 cycle, naturally aspirated	
Cylinder, quantity	3	
Displacement, L (cu. in.)	1.028 (62.7)	
Bore and stroke, mm (in.)	75 x 77.6 (2.95 x 3.05)	
Compression ratio	24.5:1	
Combustion system	Indirect injection	
Rated rpm	1800	1500
Max. power at rated rpm, HP	14.5	11.9
Governor, type	Mechanical	
Frequency regulation, mechanical governor		
No load to full load (droop)…..	5%	
Steady state ……..	±0.7%	
Angular operation		
Instant (1 min.)……	35°	
Intermittent (30 min.)……	25°	

Engine Electrical

Engine Electrical System	60 Hz	50 Hz
Battery, voltage	12 volt	
Battery charging module	8-amp	
Battery, minimum recommendation	650 CCA @ 0°F	
Starter motor	2.5 kW, 12 V	

Cooling

Cooling System	60 Hz	50 Hz
Capacity, L (qt.), approx.	3 (3.2)	
Heat exchanger type	2.5 in. dia. x 2 pass	
Seawater pump type	Belt-driven, 10-blade impeller	
Heat rejected to cooling water at rated kW, wet exhaust, kW (Btu/min.)	12 (683)	11.1 (635)
Engine water pump flow, Lpm (gpm)	21.6 (5.7)	21.2 (5.6)
Seawater pump flow, Lpm (gpm)	28.4 (7.5)	24.6 (6.5)

Fuel

Fuel System	60 Hz	50 Hz
Fuel shutoff solenoid	Electric	
Fuel pump	Electric	
Maximum recommended fuel lift, m (ft.)	1.2 (4.0)	

Lubrication

Lubricating System	60 Hz	50 Hz
Oil pan capacity with filter, L (qt.)	2.5 (2.6)	
Oil pump type	Pressure, trochoid pump	

Operation Requirements

Air Requirements	60 Hz	50 Hz
Engine combustion air requirements, L/min. (cfm)	750 (26.5)	620 (21.9)
Generator cooling requirements, L/min. (cfm)	4814 (170)	3964 (140)
Max. air intake restriction, kPa (in. H_2O)	2.5 (10.0)	1.5 (6.0)
Exhaust flow, m^3/min. (cfm)	1.8 (63.5)	1.4 (49.4)
Exhaust temp., °C (°F) at full load	398 (748)	386 (726)
Max. allowed exhaust back pressure, kPa (in. H_2O)	5.3 (21.3)	4.3 (17.3)

Fuel Consumption	60 Hz	50 Hz
Diesel, Lph (gph) at % load		
100%	3.4 (0.9)	2.6 (0.7)
75%	2.6 (0.7)	1.9 (0.5)
50%	1.9 (0.5)	1.5 (0.4)
25%	1.1 (0.3)	1.1 (0.3)

Note: The fuel consumption of the 60 Hz model is based on 9EKOZD and the fuel consumption of the 50 Hz model is based on 7EFKOZD.

Engine Features

- Low oil pressure shutdown
- High engine temperature shutdown
- Low seawater pressure shutdown
- Vibromount
- Belt guard
- Disposable oil filter
- Oil drain valve
- Programmed glow plug circuit for cold starting
- Disposable fuel filter

Alternator Features

- Brushless, rotating field design permits power to be obtained from stationary leads.
- Windings are vacuum impregnated with epoxy varnish for dependability and long life.
- Rotors are dynamically balanced to minimize vibration.
- Copper windings ensure minimal heat buildup. Insulation meets NEMA standards for class H insulation.
- Direct connected to the engine, the generator has sealed precision ball bearings with a precision-machined steel sleeve in the end bracket to prevent shaft misalignment and extend bearing life.
- Mounted on a drip-proof tray.
- Equipped with a four-lead reconnectable stator.

© 2026 Discovery Energy, LLC - All rights reserved.

Application Data

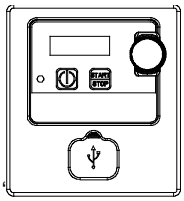

Advanced Digital Control IId Features

Controller Features:

- Integrated genset control & voltage regulation
- Selectable Smartcraft™ V1.0, NMEA 2000, & SAE J1939 outputs
- Hybrid voltage regulation
- USB interface
  - Ease of uploading and downloading software
  - Historical and diagnostic information
  - Real time diagnostics
  - Front-face accessible
  - SiteTech™ compatible for setting changes
- Metering capabilities
- NXP microprocessor with 512 KB Flash and 60 KB RAM
- 179 x 126 x 47 mm (7.1 x 5.0 x 1.9 in.) dimension
- Programmed preheat for cold starts

Display Type/Features:

- 12 character x 2 line LCD display
- Temperature range (-20 to 70°C)
- Displays:
  - Runtime hours
  - Crank cycle status
  - Generator status
  - Warnings
  - Faults
  - Diagnostics
  - Setup parameters
  - Software version
- Maintenance minder (customer programmable)
- 2-button keypad: Single power momentary and Start/Stop
- Standard non-membrane switch overlay
- Rotary encoder knob with pushbutton features:
  - Voltage
  - Gain
  - V/Hz adjustment
- Controller configuration
- Tri-color LED indicator displays system ready, warning, and fault status

SmartCraft™ is a trademark of Mercury Marine, a division of Brunswick Corporation.

Accessories

Sound Shield

Provides for highly effective silencing, ease of access for engine/generator servicing, low maintenance, excellent durability, and safety. The sound shield's customer connection panel includes connections for the following:

- Battery (positive and negative)
- Equipment ground
- Fuel inlet and return
- Seawater inlet
- Water-cooled exhaust outlet
- Oil drain
- Customer load lead access
- Customer interface

Siphon Break

Mandatory kit on generators installed below the waterline. Prevents the siphoning of flotation water into the engine.

Line Circuit Breakers

Protect the generator from extreme overload.

Ship-to-Shore Switch

Allows immediate switching to Rehlko generator set power or shore power protecting the electrical system from the possibility of simultaneous connection of both power sources.

Remote Digital Gauge

Allows starting and stopping from a location remote from the generator set.

- 3 in. gauge for J1939
  Requires a 76.2 mm (3 in.) dia. hole for mounting.
- 2 in. gauge for Smartcraft™
  Requires a 50.8 mm (2 in.) dia. hole for mounting.
- 2 in. gauge for NMEA 2000
  Requires a 50.8 mm (2 in.) dia. hole for mounting.

Remote Connection/Extension Harness

Provides wiring for the remote digital gauge.

12-Inch Remote Wiring Harness

Equipped with a 12-pin connector on one end that connects to the standard customer interface connector. Equipped on the other end with leads for connection to customer-supplied wiring.

© 2026 Discovery Energy, LLC - All rights reserved.

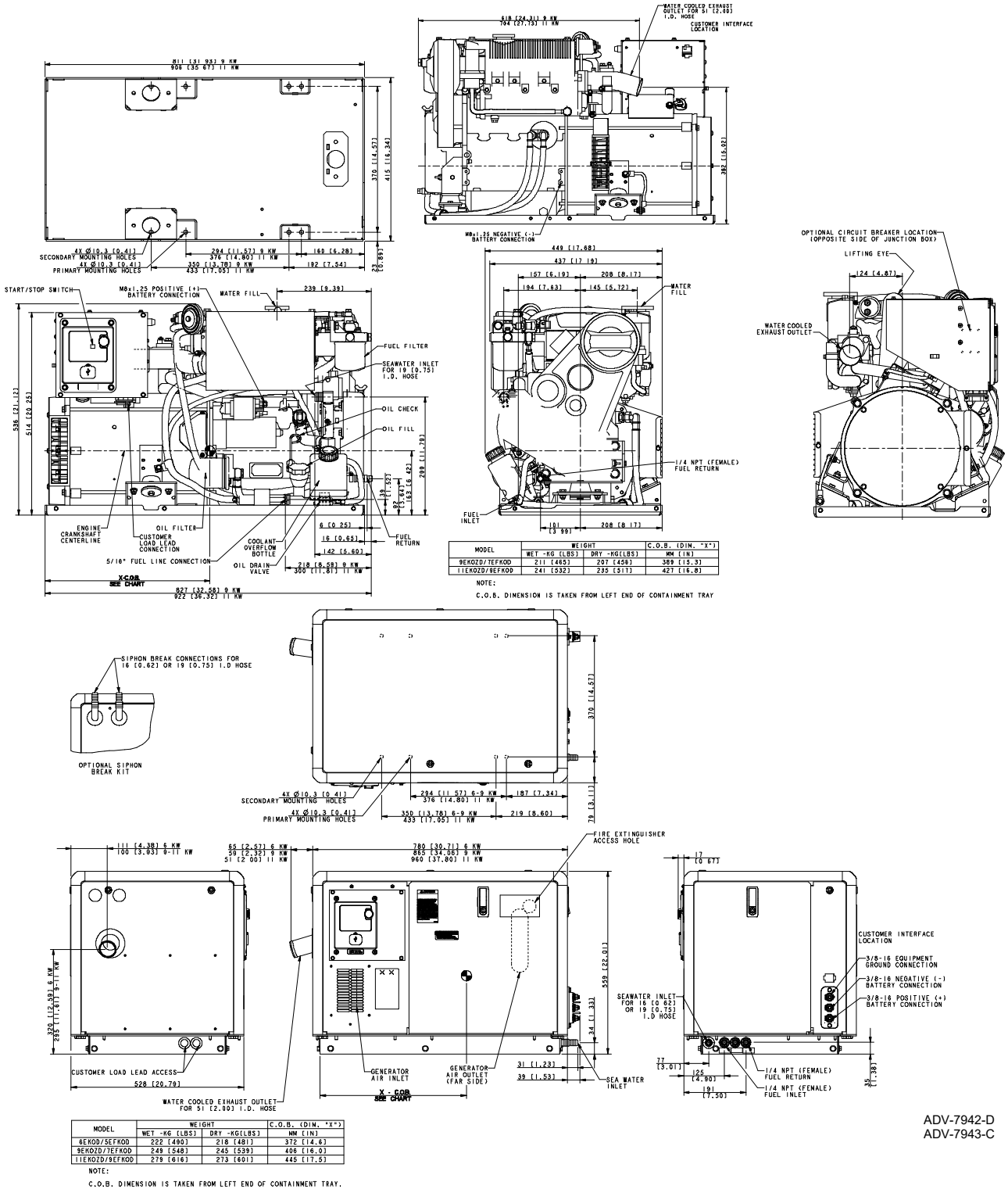

MODEL	WEIGHT		C.O.B. (DIM. "X")
	WET -KG (LBS)	DRY -KG(LBS)	MM (IN)
9EKOZD/7EFKOD	211 (465)	207 (456)	389 (15.3)
11EKOZD/9EFKOD	241 (532)	235 (517)	427 (16.8)

NOTE:
C.O.B. DIMENSION IS TAKEN FROM LEFT END OF CONTAINMENT TRAY

MODEL	WEIGHT		C.O.B. (DIM. "X")
	WET -KG (LBS)	DRY -KG(LBS)	MM (IN)
6EKOD/5EFKOD	222 [490]	218 [481]	372 [14.6]
9EKOZD/7EFKOD	249 [548]	245 [539]	406 [16.0]
11EKOZD/9EFKOD	279 [616]	273 [601]	445 [17.5]

NOTE:
C.O.B. DIMENSION IS TAKEN FROM LEFT END OF CONTAINMENT TRAY.

ADV-7942-D
ADV-7943-C

NOTE: Dimensions are shown in mm [in.].

NOTE: This drawing is provided for reference only and is not intended for installation planning. Contact your local authorized distributor for more detailed information.

© 2026 Discovery Energy, LLC - All rights reserved.